PC Electric

Connecting People...Impacting Lives!

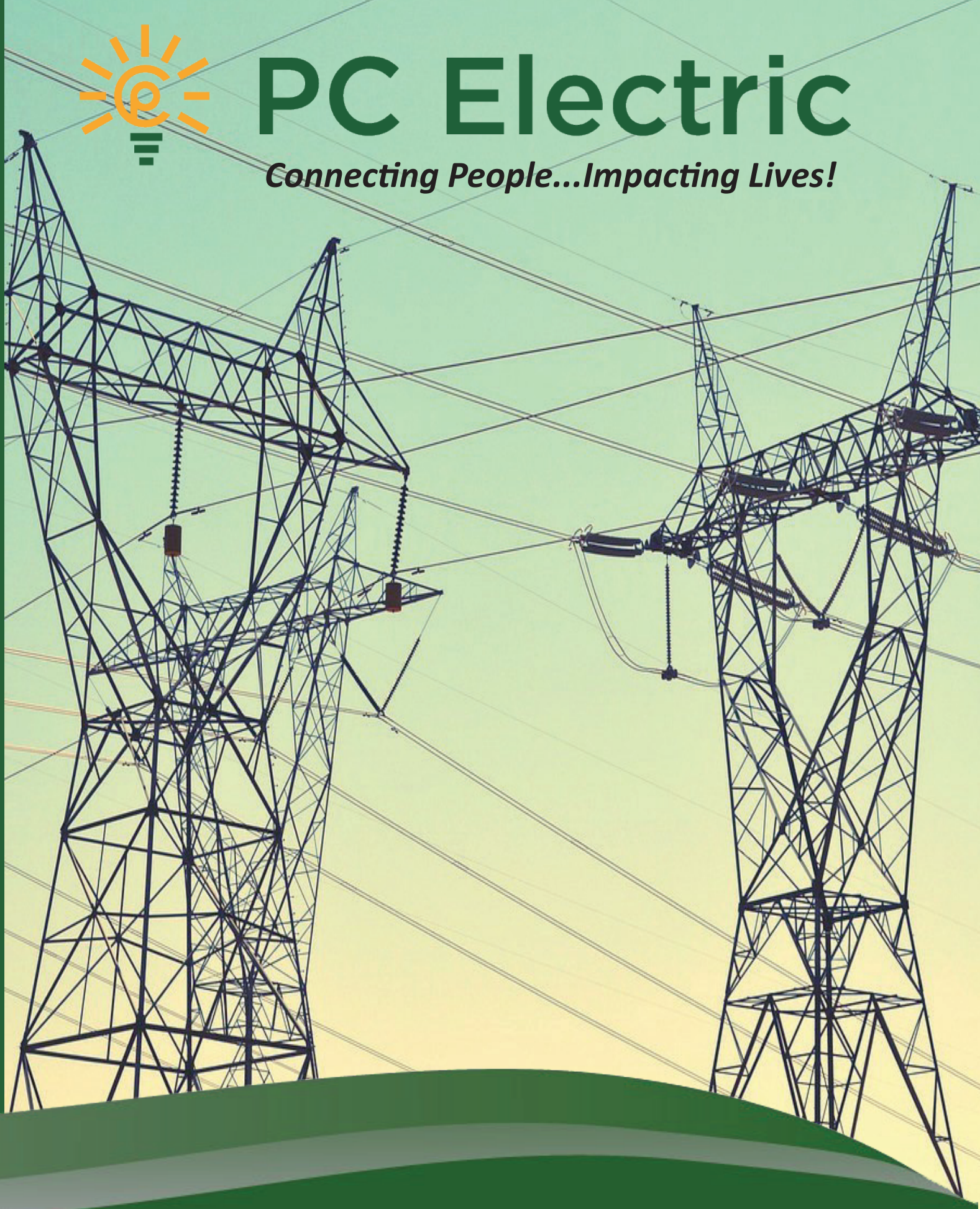

MEMBER HANDBOOK

PC Electric

Dear New Member:

On behalf of the Board of Directors and Employees of PC Electric, we welcome you to "your" electric cooperative. You own it, along with the other member consumers.

The aim of PC Electric is to make electric energy available to rural families at the lowest possible cost consistent with sound economic and good management. We have worked to improve the quality of life in your community by supplying not only reliable and competitively priced energy services, but also years of making your communities a better place to live. One of our founding principles was a commitment to our community, and this effort continues today.

We hope that this member handbook gives you an overview of the cooperative, the services we offer, and the benefits of membership. This handbook was prepared to help you get the most from your membership in the cooperative.

If all your questions are not answered in this handbook, please call us at 225-638-3751 or toll free 1-800-738-7232, or you are welcome to come by your cooperative office at 2506 False River Drive in New Roads, LA. You may also go to our website at www.pcemc.org or you can follow us on Facebook and Twitter.

Our regular office hours are 8:00 a.m. to 4:30 p.m., Monday through Thursday and 8:00 a.m. to 3:30 p.m. on Friday. A dispatcher is on duty to take your calls if there is an outage after hours, holidays and weekends.

Thank you for giving us the opportunity to serve you. Our staff will always strive to earn your confidence and meet your needs. Please let us know if we may be of further assistance.

Sincerely,

Myron A. Lambert

Myron A. Lambert
General Manager

Table of Contents

Welcome Letter **1**
General Information **4**
Statement of Non-Discrimination and Privacy Policy Notice **5**
Board of Directors and Districts **6**
History and Information **7-9**
Board of Directors' Service **10**
By-Laws **11-26**
Membership 12
Rights and Liabilities of Members 14
Meeting of Members 15
Directors 17
Meeting of Directors 20
Officers 21
Disposition of Revenues and Receipts 24
Disposition of Property 24
Seal 25
Financial Transactions 25
Miscellaneous 26
Amendments 26
Rules of Order 26
General Service Policies and Conditions **27-35**
General 27
Application for Membership and Service 27
Point of Delivery of Service 27
Use of Service 27
Right of Access to Member's Premises 29
Right-of-Way, Permits, and Franchises 29
Damages to Cooperative's Facilities 29
Relocation of Cooperative's Facilities 29
Temporary Service 29
House and Other Construction Contractors 30
Line and Service Extension Policies and Provisions 30
Underground Service and Facilities 34
Service Interruptions 34
Suspension of Service 35
Modifications 35
Billing and Collection Policies **36-39**
Billing and Meter Reading 36
Failure to Receive a Bill 36
Failure to Prepare a Bill 36
Non-Payment of Bills 36
Service Charge 36
Membership Fees and Deposits 38
Changing of Meters 39
Checking of Meters 39
Periodic Disconnects 39
Modifications 39

Table of Contents

Payment Options **40-45**
Pay by Mail 40
Payment Drop Box 40
Pay by Phone 40
Pay Online 40
How to Make Payments Online 41
How to Read Your Bill 42
Automatic Bank Draft 44
Average Monthly Bill Pay 45
Meter Loop Specifications **46-54**
For Your Safety **55-56**
Safety Tips 55
Energy Theft **57**
Building, Renovating or Landscaping **58-59**
Call Before You Dig 58
Alternative Source Generating Facilities 59
Emergency Contact Information 59
Member Services **60-64**
Adopt-A-School 60
Art Contest 60
Electrical Safety Program 60
Energy Savings Program 60
Math and Science Awards 61
Scholarships 61
4-H Endowment Program 62
Energy Efficiency Presentations for Adults 62
Economic Development 62
Cooperative Action Network 62
PC Electric Connections 63
Where Does My Money Go? 64
Power Outages **65-72**
What to do When the Lights Go Out 65
Tune In To 65
Powering Up After an Outage 66
Substation Locations and Areas Served 67-68
Mobile Substation 69
What's On An Electric Power Pole? 70
Generator Usage 71
Alternate Power Supply 71
Life Support Systems 72

General Information

Location:	2506 False River Drive New Roads, LA 70760
Mailing Address:	PC Electric P.O. Box 160 New Roads, LA 70760
Telephone Numbers:	225-638-3751 (Main Line) 1-800-738-7232 (Toll Free) 225-638-8124 (Fax)
Office Hours:	Monday—Thursday 8:00 a.m.— 4:30 p.m. Friday 8:00 a.m.— 3:30 p.m. 24 Hour Dispatchers
Website:	www.pcemc.org
	http://twitter.com/pcemc
	www.facebook.com (search for PC Electric)

With Smarthub you can check your energy usage, view your current and past billing information, view your payment history and enroll in paperless billing. The app is free. Just search for "SmartHub" in either the Apple Store or Android Market. You can also enroll on your Laptop or PC by visiting www.pcemc.org and click on the SmartHub link at the top or bottom of the page. Use PC Electric as the provider and follow the onscreen instructions to complete registration.

Associated Organizations:

Louisiana Rural Electric Association (LREA)
National Rural Electric Cooperative Association (NRECA)
National Rural Telecommunications Cooperative (NRTC)
National Rural Utilities Cooperative Finance Corporation (NRUCFC)
Rural Utilities Services (RUS)
CoBank
Capitol Regional Builders Association (CRBA)
Louisiana Association of Business and Industry (LABI)
Louisiana Chemical Association (LCA)

PC Electric is an Equal Opportunity Provider and Employer.

Statement of Nondiscrimination

PC Electric is an equal opportunity provider and employer.

Full Nondiscrimination Statement
In accordance with Federal civil rights law and U.S. Department of Agriculture (USDA) civil rights regulations and policies, the USDA, its Agencies, offices, and employees, and institutions participating in or administering USDA programs are prohibited from discriminating based on race, color, national origin, religion, sex, gender identity (including gender expression), sexual orientation, disability, age, marital status, family/parental status, income derived from a public assistance program, political beliefs, or reprisal or retaliation for prior civil rights activity, in any program or activity conducted or funded by USDA (not all bases apply to all programs).

Remedies and complaint filing deadlines vary by program or incident.

Person with disabilities who require alternative means of communication for program information (e.g., Braille, large print, audiotape , American Sign Language, etc.) should contact the responsible Agency or USDA's TARGET Center at (202)720-2600 (voice and TTY) or contact USDA through the Federal Relay Service at (800)877-8339. Additionally, program information may be made available in languages other than English.

To file a program discrimination complaint, complete the USDA Program Discrimination Complaint Form, AD-3027, found online at *http://www.ascr.usda.gov/complaint_filing_cust.html* and at any USDA office or write a letter addressed to USDA and provide in the letter all of the information requested in the form. To request a copy of the complaint form, call (866) 632-9992. Submit your completed form or letter to USDA by:

(1) mail: U.S. Department of Agriculture
Office of the Assistant Secretary for Civil Rights
1400 Independence Avenue, SW
Washington, D.C. 20250-9410;
(2) fax: (202) 690-7442; or
(3) email: program.intake@usda.gov

USDA is an equal opportunity provider, employer, and lender.

Privacy Policy Notice

AN IMPORTANT NOTICE CONCERNING MEMBER PRIVACY FROM PC ELECTRIC

Having your trust and confidence is important to PC Electric. For this reason, we are careful in the way we handle nonpublic personal information about out members ("Customer Information"). This Privacy Notice describes our policies and practices concerning member information and how they are designed to preserve the trust of our members.

- We will only collect and use information for core business purposed:
- Individual privacy is very important, so we will only collect and use information needed to offer and fulfill our core business purposes.
- We will be lawful and fair to the individual whose data we are storing and will retain only what we need to maintain our relationship with them. This means we will not disclose information for an unrelated purpose without the consent of the individual or by authority of law.
- We will strive for data quality: Our ability to successfully implement our business is dependent on maintaining accurate information. We will strive to keep information we hold about customers accurate.
- We will be open about how we use data.
- We do not trade or sell your personal data to third parties.
- We do not use cookies.
- For more information about out privacy protection practices, contact: James Jewell @ 225-638-3751 or email jjewell@pcemc.org.

Board of Directors and Districts

District 1--Al Ewing
Innis, Lettsworth, Legonier, Smithland, Torras, Batchelor, Jacoby, Old River (Camps North)

District 2--Jimmy Ewing, Jr. (President)
Batchelor, Old River (Camps South), Morganza, Coon, McCrea, Ravenswood

District 3--George G. LaCour, Jr. (Vice President)
Labarre, Northwest New Roads, Fordoche, Livonia

District 4--Ralph B. Chustz, Sr. (Secretary/Treasurer)
Northeast New Roads, Waterloo, Patin Dyke, Ventress, Hermitage

District 5--Peter Rumfola, Jr.
Rougon, Erwinville, Bueche, Lakeland, Arbroth, Yattan, Walls

District 6--Eric Elliott
Livonia, Maringouin, Rosedale, Ramah, Grosse Tete, Bayou Blue, Indian Bayou

District 7--Chris Settoon
Bayou Pigeon and Bayou Sorrel

History and Information

PC Electric was organized and received its state charter on September 15, 1938. This electric cooperative serves areas of Iberville, Pointe Coupee and West Baton Rouge parishes.

PC Electric is owned and operated locally by the people who receive electric service. The electric cooperative borrowed money from the Rural Electric Administration (REA) - now named Rural Utilities System (RUS) to build lines and is repaying the loans plus interest. The individuals or businesses that are customers of PC Electric are called members.

As of December, 2018, there were 7,821 members with a $5.00 membership, 10,405 active accounts (meters) and 1,109 miles of lines.

There are 11 electric cooperatives in Louisiana and over 1,000 within the U.S.

Jimmy Ewing, Jr. is the president of the board. He is one of seven directors. The seven directors of the board are as follows:

Jimmy Ewing, Jr., President
George G. LaCour, Jr., Vice-President
Ralph B. Chustz, Sr., Secretary/Treasurer
Al Ewing
Peter Rumfola, Jr.
Chris Settoon
Eric Elliott

PC Electric holds its annual membership meeting at noon on a date determined by the board of directors sometime during the months of January, February or March each year. The annual membership meeting is provided by law and gives members the opportunity to hear and evaluate reports and to discuss issues pertaining to the operation of the business enterprise they own.

The members elect directors by mail ballots prior to the annual meeting. The candidates are nominated by a nominating committee and by written petition of 15 members. The cooperative territory is divided into seven districts with one member elected from each district to serve as a director of the board.

Myron A. Lambert is the general manager. He was selected by the Directors and is responsible for carrying out the day-to-day operations of the electric cooperative within the guidelines determined by the board. There are 41 employees that are hired by the manager and they are responsible to him.

History and Information

The following speech was given by Mr. A. B. Curet on January 25, 1950 at the R.E.A. Building Dedication on New Roads Street; New Roads, Louisiana. Mr. Curet was with the parish ag extension office and played a key role in starting Pointe Coupee Electric Membership Corporation. (now PC Electric)

Thank you Mr. Chairman: Ladies and gentlemen, it is indeed a happy privilege as well as a high honor for me to appear before you on this occasion. Yes, I can rejoice with you now that you too enjoy the many blessings which come to electrified homes, farms and shops. In order that we might properly appraise your accomplishment, however, let us turn in retrospection to the year 1937 when a group of nine Pointe Coupee citizens met a representative of R.E.A. and myself on Mr. Henry P. Mounger's lawn at Lettsworth to discuss R.E.A. facilities and to apply for a government loan with which to create this unit. That, my friends, was the beginning of a new life in the rural sections comprising this district, because at long last, farm people were to receive the comforts, conveniences and attendant blessings which electricity affords, and which, far too many farm people had not enjoyed.

Let us review some of the pertinent facts about our organization. First of all, why exist as a cooperative? The reason for and justification of the R.E.A. was manifestly clear to the older folks but may not be known by a lot of you young members. Back in the nineteen thirties and previous to that memorable period, private power companies throughout the nation had built lines to the thickly settled communities and captured the cream of the business, but did not reach out into the strictly rural areas where returns on invested capital might not be up to their expectations. Such a position, of course, was understandable because private capital generally is made available only to ventures showing at least proper profits from the sums involved. The fact that rural areas did not offer even fair early returns to prospective investors was neither the fault of the farmer nor the businessman, but was, by no stretch of imagination, reason for longer delaying rural electrification. This service to farm people had long been thought of and discussed in the halls of Congress, but only became a reality with the great humanitarian program set in motion by the late and lamented President Franklin D. Roosevelt. Yes, with the New Deal was born to rural America instrumentalities through which direly needed farm finance, better housing, improved educational facilities, better roads, protected bank deposits, rural electrification and other aids heretofore undreamed of and unrealized by the men of the soil.

To some people such humanitarian benefits coming from a government are termed improver functions and government invasion of the field of business. Be that as it may, but friends, the chief functions of a considerate government should be to make available to all segments of its great national family relative and comparative protection from bodily injury, from fear and want, as well as opportunities for financial, social and educational advancement. A government in a Democracy is the organized and expressed will of its people set up with a blue print or Constitution to carry out the rules of the game of life. I am happy that we live in a land where the government is the servant of the people and pray to God that the people will never be slaves to the State as we so clearly observe in other countries.

Now, let's get back to our own organization. For those of you who may not know about our history, I will discuss it briefly. In the first place, this and all other R.E.A. cooperatives are not owned by the government, but have been sponsored by it through government loans and partial supervision. You members are the potential owners of this service. You are borrowers of the funds needed to organize, construct and set into motion the entire facilities and physical equipment known as the Pointe Coupee Electric Membership Corporation. The first loan consisting of $100,000.00 and subsequent requirements did come from the government treasury and within thirty or more years will be paid back to Uncle Sam with interest at which time you will be the sole owners of the service which will serve you and posterity for all time to come. While during its debt-liquidating period, its rates are about on level with that of private companies, despite the fact that you had to serve thinly settled and less profitable areas. As debts are reduced, your cost of electricity should be reduced and your assets increased.

History and Information

I am happy to observe from your report that your unit now serves 2,565 customers, along 375 miles of line within the parishes of Pointe Coupee, West Baton Rouge and Iberville. It is no wonder that the percentage of electrified rural homes in the United States has been stepped up from 15 to 40 percent within the past few months and that the three-millionth customer was put on recently. You should take pardonable pride in having a part in so praise-worthy an achievement.

I am further informed that your organization will take on the great task of extending rural telephones to many of your farm homes, which again will fill an important need.

An inspection of your new home reveals the presence of a modern kitchen which means that a Home Economics Specialist will be put on to assist with the proper and increased use of electric appliances and devices thus stepping up their benefits to rural people.

Friends, while I could say a great deal more about this splendid service, I observe that you have many fine features on your program, and shall dedicate this home which your Board of Directors have so masterfully provided. Its design and architecture bespeak the loftiness and high purpose of those vested with authority, its floor plan reflects complete and considered concern for its employees, and visiting members, and its all embracing facilities portend ever increasing service to its members. In dedicating this magnificent edifice, it is my fervent hope that all who enter its portals shall be imbued with the spirit of its founders and forever preserve its high purpose, duty. Yes, efficiency in service to the home, farm and shop will justify its erection and render easier the many chores of farm life. Let not the grandeur of this splendid home detract you from the high purpose which created it, but rather inspire you to increased devotion to a noble task.

I thank you.

Main Office: 1938-1950

Main Office: 1950-1981

Main Office: 1981-Present

Board of Directors' Service

Board Member	Term Began	Term Ended
Mrs. Frank S. Rice	September 15, 1938	January 27, 1988
Harry H. Melancon	September 15, 1938	March or April 1962
Ovide B. LaCour	September 15, 1938	November 4, 1964
Alfred A. Robinson	September 15, 1938	November 8, 1940
Mrs. Ruby Merrick	September 15, 1938	June 13, 1951
Emile Jewell	September 15, 1938	January 31, 1939
J.P. Kemper	September 15, 1939	July 8, 1941
J. Rene Patin	January 31, 1940	December 12, 1951
Dr. J.O. St. Dizier	January 29, 1941	January 30, 1946
James M. Holloway	July 8, 1941	January 25, 1995
Joe F. Reeder	January 30, 1946	December 14, 1955
Frank Merrick	June 13, 1951	August 15, 1983
Richard Glynn	December 12, 1951	October 3, 1989
John R. Reeder	December 14, 1955	January 27, 1960
C.L. Sanders	January 27, 1960	September 13, 1977
Lawrence G. Crochet	May 15, 1962	January 31, 1996
Jere Cotten	November 11, 1964	May 14, 1978
Mrs. C.L. Sanders	October 28, 1977	July 22, 1981
Wilson Chustz	June 8, 1978	December 7, 1979
Mrs. Bernice L. Chustz	January 30, 1980	January 15, 1986
Earnest Swanson, Sr.	August 27, 1981	January 31, 1990
McVea C. Benton	October 6, 1983	January 27, 1988
John Grezaffi	January 29, 1986	January 27, 1988
Irvin E. Settoon, Sr.	January 27, 1988	May 25, 2017
Al Ewing	January 27, 1988	Present
Jimmy J. Ewing, Jr.	January 25, 1989	Present
Charles Black	January 31, 1990	June 20, 1991
Ralph B. Chustz, Sr.	January 31, 1990	Present
Peter Rumfola, Jr.	December 5, 1991	Present
Alton B. Smith, Jr.	January 25, 1995	January 30, 2019
George G. LaCour Jr.	January 31, 1996	Present
Chris Settoon	May 25, 2017	Present
Eric Elliott	January 30, 2019	Present

By-Laws

TO ALL MEMBERS OF PC Electric

This section contains the By-Laws of your Cooperative. It is sent to you in accordance with its provisions.

A Cooperative such as yours is owned by you the members of the Cooperative, governed through a board of Directors, and the by-laws.

These by-laws should be read by every member, and the copy sent you herewith should be kept by you and referred to from time to time as questions arise.

An explanation of any section of these by-laws will be made upon request.

Cooperatively yours,

THE BOARD OF DIRECTORS

District 1

AL EWING

District 2

JIMMY EWING, JR.
President

District 3

GEORGE G. LACOUR, JR.
Vice President

District 4

RALPH B. CHUSTZ, SR.
Secretary/Treasurer

District 5

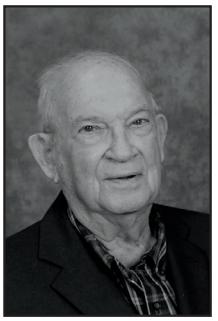

PETER RUMFOLA, JR.

District 6

ERIC ELLIOTT

District 7

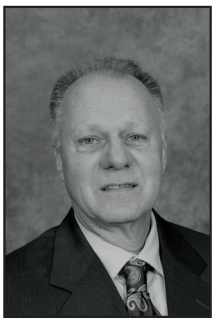

CHRIS SETTOON

By-Laws

The aim of PC Electric is to make electric energy available to rural families at the lowest possible cost consistent with sound economy and good management.

BY-LAWS
OF
PC ELECTRIC

ARTICLE I
Membership

Section 1. Requirements for Membership. Any person, firm, association, corporation or body politic or sub-division thereof may become a member in PC Electric, (hereinafter called the "Cooperative") by:

(a) filing a written application for membership therein;
(b) agreeing to purchase from the Cooperative electric energy as herein specified;
(c) agreeing to comply with and be bound by the articles of incorporation and by-laws of the Cooperative and any rules and regulations adopted by the board of directors; and
(d) paying the membership fee hereinafter specified.

No member may hold more than one membership in the cooperative, and no membership in the Cooperative shall be transferable.

Section 2. Joint Membership. An application for membership in the cooperative, pursuant to Article I, Section 1, by a married person shall constitute a joint membership in the Cooperative. The term "member" as used in these by-laws shall be deemed to include a husband and wife and any provisions relating to the rights and liabilities of membership shall apply equally with respect to a husband and wife. Without limiting the generality of the foregoing, the effect of the hereinafter specified actions by or in respect to the holders of a joint membership, shall be as follows:

(a) The presence at a meeting of either or both shall be regarded as the presence of one member and shall constitute a joint waiver of notice of the meeting;
(b) The vote of either separately or both jointly shall constitute one joint vote;
(c) A waiver of notice signed by either or both shall constitute a joint waiver;
(d) Notice to either shall constitute notice to both;
(e) Expulsion of either shall terminate the joint membership;
(f) Withdrawal of either shall terminate the joint membership;
(g) Either but not both may be elected or appointed as an officer or director, provided that both meet the qualifications for such office; and
(h) A husband and wife who hold a joint membership shall be liable in solido for the full amount of any debt due and owing the Cooperative.

Section 3. Conversion of Membership

(a) A membership shall be converted to a joint membership upon the marriage of the holder thereof.

(b) Upon the death of either spouse who is a party to the joint membership such membership shall be held solely by the survivor; provided, however, that the estate of the deceased shall not be released from any debts due the Cooperative.

Section 4. Membership and Service Connection Fees. The Membership fee shall be five dollars. The board of directors may establish from time to time a service connection fee to be charged and collected for each service connection.

Section 5. Purchase of Electric Energy. Each member shall, as soon as electric energy shall be available, purchase from the Cooperative all electric energy used on the premises specified in his application for membership, and shall pay therefore monthly at the rates which shall from time to time be fixed by the board of directors; provided, however, that the board of directors may limit the amount of electric energy which the Cooperative shall be required to furnish to any one member. Each member shall pay to the Cooperative such minimum amount per month as shall be fixed by the board of directors from time to time regardless of the amount of electric energy consumed. Each member shall also pay all amounts owed to the Cooperative as and when the same shall be come due and payable.

Section 6. Termination of Membership. Any member may withdraw from membership upon compliance with such uniform terms and conditions as the board of directors may prescribe. The board of directors of the Cooperative may, by the affirmative vote of not less than two-thirds of all the directors, expel any member who shall have refused or failed to comply with any of the provisions of the articles of incorporation, by-laws or rules or regulations adopted by the board of directors, but only if such member shall have been given written notice by the Secretary of the Cooperative that such refusal or failure makes him liable to expulsion and such refusal or failure shall have continued for at least ten days after such notice was given. Any expelled member may be reinstated by vote of the board of director or by vote of the members at any annual or special meeting.

Upon withdrawal, death, cessation of existence or expulsion of a member, the membership of such member shall thereupon terminate. Termination of membership in any manner shall not release a member or his estate from any debts due the Cooperative.

By-Laws

ARTICLE II
Rights and Liabilities of Members

Section 1. Property Interest of Members. Members shall have no individual or separate interest in the property or assets of the Cooperative except that upon dissolution the property and assets of the Cooperative remaining after all debts and liabilities of the Cooperative are paid, shall be distributed among the members in the proportion of all members during the seven years next preceding the date of the filing of the certificate of dissolution.

Section 2. Non-liability for debts of the Cooperative. The private property of the members shall be exempt from execution or other liability for the debts of the Cooperative and no member shall be individually liable or responsible for any debts or liabilities of the Cooperative.

ARTICLE III
Meeting of Members

Section 1. Annual Meetings. The annual meeting of the members shall be held on a date as determined by the board of directors during the months of January, February or March of each year, at such place in the Parishes of Pointe Coupee, West Baton Rouge or Iberville, State of Louisiana, as designated in the notice of the meeting for the purpose of passing upon reports for the previous fiscal year and transacting such other business as may come before the meeting. If the day fixed for the annual meeting shall fall on a legal holiday, such meeting shall be held on the next succeeding business day. Failure to hold the annual meeting at the designated time shall not work a forfeiture or dissolution of the Cooperative.

Section 2. Special Meetings. Special meetings of the members may be called by resolution of the board of directors or upon a written request signed by any three directors, by the President, or by ten per centum or more of all the members, and it shall thereupon be the duty of the Secretary to cause notice of such meetings to be given as hereinafter provided. Special meetings of the members may be held at any place within the Parishes of Pointe Coupee, West Baton Rouge or Iberville, State of Louisiana, as specified in the notice of the special meeting.

Section 3. Notice of Members' Meetings. Written or printed notice stating the place, day and hour of the meeting and, in case of a special meeting or an annual meeting at which business other than that listed in section 6 of this article is to be transacted, the purpose or purposes for which the meeting is called, shall be delivered not less than ten days nor more than twenty-five days before the date of the meeting, either personally or by mail, by or at the direction of the Secretary, or upon a default in duty by the Secretary, by the person calling the meeting, to each member. If mailed, such notice shall be deemed to be delivered when deposited in the United States mail, addressed to the member at his address as it appears on the records of the Cooperative, with postage thereon prepaid. The failure of any member or members to receive notice of an annual meeting or special meeting of the members shall not invalidate any action which may be taken by the members at any such meeting.

Section 4. Quorum. As long as the total number of members does not exceed five hundred, ten per centum of the total number of members present in person shall constitute a quorum. In case the total number of members shall exceed five hundred, fifty members or five per centum of the members, whichever shall be the largest, shall constitute a quorum. Provided, however, that at any membership meeting at which voting by mail is authorized, fifteen per centum of the members shall constitute a quorum; and provide further, that for any district meeting of members for the election of a director, one hundred members or ten per centum of the members, whichever shall be the larger, from such district shall constitute a quorum.

If less than a quorum is present at any meeting, a majority of those present in person may adjourn the meeting from time to time without further notice, provided that the Secretary shall notify any absent members of the time and place of such adjourned meeting.

Section 5. Voting. Voting by mail is authorized at any meeting of the members, including district meetings. Each member shall be entitled to only one vote. The president or his designee in writing shall cast the vote of a firm, association, corporation or body politic or sub-division thereof. All questions shall be decided by a vote of a majority of the members voting thereon, except as otherwise provided by law, the articles of incorporation or these by-laws; provided, however, that voting by mail is not authorized for consideration by the members of the sale, lease or other disposition or encumbrance of all or any substantial portion of the property belonging to the Cooperative.

By-Laws

Section 6. Order of Business. The order of business at the annual meeting of the members and, so far as possible, at all other meetings of the members, shall be essentially as follows:

1. Report as to members present in order to determine the existence of a quorum.
2. Reading of the notice of the meeting and proof of the due publication or mailing thereof, or the waiver or waivers of notice of the meeting, as the case may be.
3. Reading of unapproved minutes of previous meetings of the members and the taking of necessary action thereon.
4. Presentation and consideration of reports of officers, directors and committees.
5. Unfinished business.
6. New business.
7. Adjournment.

ARTICLE IV
Directors

Section 1. General Powers. The business and affairs of the Cooperative shall be managed by a board of seven (7) directors which shall exercise all the powers of the Cooperative except such as are by law, the articles of incorporation or these by-laws conferred upon or reserved to the members.

Section 2. Qualifications. No person shall be eligible to become or remain a director or to hold any position of trust in the Cooperative who:

(a) is not an individual member and bona fide resident in the area serviced by the Cooperative; or
(b) is in any way employed by or financially interested in a competing enterprise or a business selling electric energy or supplies to the Cooperative; or
(c) is the incumbent or spouse of, or a candidate for or spouse of, an elective public office, it being the intent of the members of the Cooperative that the board of directors of the Cooperative be free from the influence of political officials; or
(d) is convicted felon; or
(e) is a close relative of any employee of the Cooperative; or
(f) is a current employee of the Cooperative or a former employee of the Cooperative, or a close relative of the former employee, which former employee has been voluntarily or involuntarily terminated, with or without cause other than by reason of normal retirement, from employment by the Cooperative within the past five years.
(g) is eighty (80) years of age or older. A director who attains eighty (80) years of age while serving a term of office shall be allowed to complete that term of office. All present Board Members holding office on April 9, 2018 are exempted from this provision.

Close relative shall mean the husband or wife, child, mother or father, stepmother or stepfather, mother-in-law, father-in-law, sister or brother, brother-in-law, sister-in-law, daughter-in-law, or son-in-law. This provision shall be effective from and after the date of the adoption of these by-laws, it being the intent hereof that current directors and close relatives in the employ of the Cooperative as of the date of adoption are validly qualified and/or employed.

Upon establishment of the fact that a director is holding office in violation of any of the foregoing provisions, it shall immediately become incumbent upon the board of directors to remove such director from office.

Nothing contained in this section shall affect in any manner whatsoever the validity of any action taken at any meeting of the board of directors.

Section 3. Voting Districts. Beginning with the year 1988, the territory served by the cooperative shall be divided into seven (7) districts, each of which shall be represented by one director elected by the membership of each such district. The original seven (7) districts are set forth and designated on the maps, copies of which are attached hereto and made a part of these by-laws as page 7.

On a date specified by the board of directors, beginning in the year 1988, the board of directors shall provide for and schedule a separate election for the membership of each district with a director standing for election in such year at a location within such district, for the purpose of electing a person from such district to represent that district on the board of directors of the Cooperative. The terms of office of Directors elected from each such district shall be as follows:

By-Laws

(a) Directors elected from District Nos. 1 and 7 shall serve for a three (3) year term beginning in January, 1988

(b) Directors elected from District Nos. 2, 4 and 6 shall serve for a three (3) year term beginning in January, 1989.

(c) Directors elected from District Nos. 3 and 5 shall serve for a three (3) year term beginning in January, 1990.

The current directors shall continue to serve until the expiration of their existing term or until their resignation at which time they may qualify and run for election from their respective district.

The board of directors shall provide for similar elections in each district as the term of the office of the director from that district expires or as otherwise provided in these by-laws. Such elections shall be decided by plurality vote. All directors elected shall serve for a term of three (3) years. All such subsequent elections shall be on a date specified by the board of directors. If less than a quorum votes at any district election, the current director representing such district shall automatically be declared re-elected, provided, however, that in the event the current director representing such district is not a candidate for reelection, the nominee of the nominating committee shall automatically be declared elected and the board of directors shall be notified that a quorum failed to vote. An independent certified public accountant shall be used to verify all election results.

Section 4. Nominations. It shall be the duty of the board of directors to appoint, not less than sixty nor more than ninety days before the date of a district election of the members at which a director is to be selected, a committee on nominations composed of not less than three nor more than five members residing in said district. No member of the board of directors shall serve on such committee. The committee shall prepare and post at the principal office of the Cooperative, at least thirty-five (35) days before the election, their recommendation for director from that district. Any fifteen members acting together may make another nomination by petition not less than fifteen (15) days prior to the election and the secretary shall post such nomination at the same place where the nomination of the committee is posted. Nominations from the floor are prohibited.

The date, time and place of any meeting of a committee on nominations so appointed by the board of directors of the Cooperative shall be published in at least two issues of the official journal of each Parish in which the Cooperative is domiciled or provides service, not less than ten days prior to the meeting. In lieu of publication of official journals, such publication may be accomplished by the use of the monthly issue of the membership publication immediately preceding the meeting, mailed to all members of the Cooperative.

Section 5. Removal of Directors by Members. Any member may bring charges for cause against a director by filing such charges in writing with the secretary, together with a petition signed by at least ten per centum of the members residing in the district from which the director was elected and request the removal of such director by reason thereof. Each page of the petition shall, in the forepart thereof, state the names and addresses of the members filing such charge(s), a verbatim statement of such charge(s) and the name of the director against whom such charge(s) is (are) being brought. The director against whom such charges have been brought shall be informed in writing of the charges at least five days prior to the meeting at which the charges are to be considered and shall have an opportunity at the meeting to be heard in person, by witnesses, by counsel or any combination of such, and to present evidence in respect of the charges; and the persons bringing the charges against him shall have the same opportunity. The question of the removal of such director shall be considered and voted upon at the next regular or special meeting of the members from that district and any vacancy created by such removal may be filled by vote of the members at such meeting without compliance with the foregoing provisions with respect to nomination; provided that the question of the removal of a director shall not be voted upon at all unless some evidence in support of the charges against him shall have been presented during the meeting through oral statements, documents or otherwise.

Section 6. Vacancies. Subject to the provision of these by-laws with respect to filling of vacancies caused by the removal of directors by the members, a vacancy occurring in the board of directors may be filled by the affirmative vote of a majority of the remaining Directors for the unexpired portion of the term of the Director in respect of whom the vacancy occurs.

Section 7. Compensation. Directors as such shall not receive any salary for their services, but by resolution of the board of directors a fixed sum and expenses of attendance, if any, may be allowed for attendance at each meeting of the board of directors, at any meeting of a committee of the board of directors, and for the attendance by any officer or director of the cooperative as a representative of the cooperative for any legal, regulatory, business or statewide cooperative activity of the cooperative. Current directors, and any former directors who served as a director for 10 years or more, shall be eligible to receive insurance benefits for themselves and their dependents through the cooperative's insurance program as it may exist from time to time. Except as otherwise provided herein, no director shall receive compensation for serving the Cooperative in any other capacity, nor shall any close relative of a director receive compensation for serving the Cooperative, unless the service by the director or by the close relative of the director shall be specifically authorized by a vote of the board of directors. These restrictions shall not be applicable for cooperative purchases of meals, fuel, or merchandise in the ordinary course of business.

Section 8. Term Limits. A member can serve as a Director for total terms of 25 years or until the Director reaches the age of 80. A Director who is serving when the twenty-five year term applies or reaches the age of 80, can remain as a Director until the completion of his final term. All present Board Members holding office April 9, 2018 are exempted from these provisions.

By-Laws

ARTICLE V
Meeting of Directors

Section 1. Regular Meeting. A regular meeting of the board of directors shall be held without notice other than this by-law, immediately after the annual meeting of the members. A regular meeting of the board of directors shall also be held monthly at such time and place in New Roads, Parish of Pointe Coupee, State of Louisiana, as the board of directors may provide by resolution. Such regular monthly meetings may be held without notice other than such resolution fixing the time and place thereof.

Section 2. Special Meetings. Special meetings of the board of directors may be called by the President or by any three directors, and it shall thereupon be the duty of the Secretary to cause notice of such meetings to be given as hereinafter provided. The President or the directors calling the meeting shall fix the time and place for the holding of the meeting.

Section 3. Notice of Directors' Meeting. Written notice of the time, place and purpose of any special meeting of the board of directors shall be delivered not less than five days prior thereto, either personally, by mail or by facsimile, at the direction of the Secretary, or upon a default in duty by the Secretary, by the President or the directors calling the meeting, to each director. If mailed or faxed, such notice shall be deemed to be delivered when deposited in the United States mail addressed to the director at his address as it appears on the records of the Cooperative, with postage thereon prepaid, or, if by facsimile, by the facsimile report.

Section 4. Quorum. A majority of the board of directors, either in person or by telephone or similar communications, shall constitute a quorum, provided that if less than such majority of the directors is present at said meeting or by telephone or similar communications, a majority of the directors present may adjourn the meeting from time to time; and provided further, that the Secretary shall notify any absent directors of the time and place of such adjourned meeting. The act of the majority of the directors present at a meeting at which a quorum is present either in person or by telephone or similar communications shall be the act of the board of directors.

Section 5. Meetings by Telephone or Similar Communications. The board of directors, or any one or more of the directors, may participate in a meeting by means of conference telephone or similar communications equipment by means of which all or any directors participating in the meeting can hear each other, and participation in such meeting shall constitute the presence in person by such director at such meeting.

ARTICLE VI
Officers

Section 1. Number. The officers of the Cooperative shall be President, Vice-President, Secretary and Treasurer, and such other officers as may be determined by the board of directors from time to time. The offices of Secretary and of Treasurer may be held by the same person.

Section 2. Election and Term of Office. The officers shall be elected annually by and from the board of directors at the meeting of the board of directors held directly after the annual meeting of the members. If the election of officers shall not be held at such meeting, such election shall be held as soon thereafter as conveniently may be. Each officer shall hold office until the first meeting of the board of directors following the next succeeding annual meeting of the members or until his successor shall have been elected and shall have qualified. Beginning at the annual meeting for January, 2018, all officers and agents of the cooperative shall be nominated and elected by secret ballot and all officers and agents shall be limited to four (4) consecutive terms. A vacancy in any office shall be filled by the board of directors for the unexpired portion of the term.

Section 3. Removal of Officers and Agents by Directors. Any officer or agent elected or appointed by the board of directors may be removed by the board of directors whenever, in its judgment, the best interest of the Cooperative will be served thereby. In addition, any member of the Cooperative may bring charges against any officer by filing such charges in writing with the Secretary, together with the petition signed by ten per centum of the members, and request the removal of the particular officer by reason thereof. The officer against whom such charges have been brought shall be informed in writing of the charges at least five days prior to the meeting at which the charges are to be considered and shall have an opportunity at the meeting to be heard in person or by counsel and to present evidence in respect of the charges; and the person or persons bringing the charges against him shall have the same opportunity. The question of the removal of such officer shall be considered and voted upon at the next regular or special meeting of the members.

Section 4. President. The president shall:

a) be the principal executive officer of the Cooperative and, unless otherwise determined by the members of the board of directors, shall preside at all meetings of the members and the board of directors;

b) sign any deeds, mortgages, deeds of trust, notes, bonds, contracts or other instruments authorized by the board of directors to be executed, except in cases in which the signing and execution thereof shall be expressly delegated by the board of directors or by these by-laws to some other officer or agent of the Cooperative, or shall be required by law to be other wise signed or executed; and

c) in general perform all duties incident to the office of President and such other duties as may be prescribed by the board of directors from time to time.

Section 5. Vice-President. In the absence of the President or in the event of his inability or refusal to act, the Vice-President shall perform the duties of the President, and when so acting, shall have all the powers of and be subject to all the restrictions upon the President. The Vice-President shall also perform such other duties as from time to time may be assigned to him by the board of directors.

By-Laws

Section 6. Secretary. The secretary shall:

a) keep the minutes of the meetings of the members and of the board of directors in one or more books provided for that purpose;
b) see that all notices are duly given in accordance with these by-laws or as required by law;
c) be custodian of the corporate records and of the seal of the Cooperative and affix the seal of the Cooperative to all documents, the execution of which on behalf of the Cooperative under its seal is duly authorized in accordance with provisions of these by-laws;
d) keep a register of the names and post office addresses of all members;
e) have general charge of the books of the Cooperative in which a record of the members is kept;
f) keep on file at all times a complete copy of the articles of incorporation and by-laws of the Cooperative, containing all amendments thereto, which copy shall always be open to the inspection of any member, and at the expense of the Cooperative, forward a copy of the by-laws and of all amendments thereto to each member; and
g) in general perform all duties incident to the office of Secretary and such other duties as from time to time may be assigned to him by the board of directors.

Section 7. Treasurer. The Treasurer shall:

a) have charge and custody of and be responsible for all funds and securities of the Cooperative;
b) be responsible for the receipt of and the issuance of receipts for money due and payable to the Cooperative from any source whatsoever, and for the deposit of all such moneys in the name of the Cooperative in such bank or banks as shall be selected in accordance with the provision of these by-laws; and
c) in general perform all duties incident to the office of Treasurer and such other duties as from time to time may be assigned to him by the board of directors.

Section 8. Manager. The board of directors shall appoint a manager who shall perform such duties and shall exercise such authority as the board of directors may from time to time vest in him.

Section 9. Bonds of Officers. The Treasurer and any other officer or agent of the Cooperative charged with responsibility for the custody of any of its funds or property shall give bond in such amount and with such surety as the board of directors shall determine. The board of directors in its discretion may also require any other officer, agent or employee of the Cooperative to give bond in such amount and with such surety as it shall determine.

Section 10. Compensation. The powers, duties and compensation, of any officers, agents and employees shall be fixed by the board of directors subject to the provisions of these by-laws with respect to compensation for directors and close relatives.

Section 11. Indemnification. The Cooperative shall indemnify any person, who is or was a party of or is threatened to be made a party to any action, suit or proceeding, whether civil, criminal, administrative, or investigative (including any action by or in the right of the Cooperative) by reason of the fact that he is or was a director, officer, employee or agent of the Cooperative, or is or was serving at the request of the Cooperative as director, officer, employee or agent of another business, foreign or non-profit corporation, partnership, joint venture or other enterprise, against expenses (including attorney's fees), judgments, fines and amounts paid in settlement actually and reasonably incurred by him in connection with such action, suit or proceeding if he acted in good faith and in a manner he reasonably believed to be in or not opposed to the best interest of the Cooperative, and, with respect to any criminal action or proceeding, had no reasonable cause to believe his conduct was unlawful. The termination of any action, suit or proceeding by judgment, order, settlement, conviction or upon a plea of nolo contender or its equivalent, shall not, of itself, create a presumption that the person did not act in good faith and in a manner which he reasonably believed to be in or not opposed to the best interest of the Cooperative, and, with respect to any criminal action or proceeding, had reasonable cause to believe that his conduct was unlawful. This Cooperative may, but shall not be obligated to, maintain insurance, at its expense to protect itself and any such person named above against any such liability, cost or expense. The indemnity as to officers and directors shall be extended by the Cooperative as of right to the full extent permitted or authorized by the General Corporation law of Louisiana. The extension of protection to all others is permissible and not mandatory and is to be exercised at the discretion of the board of directors.

Section 12. Reports. The officers of the Cooperative shall submit at each annual meeting of the members reports covering the business of the Cooperative for the pervious fiscal year. Such reports shall set forth the condition of the Cooperative at the close of such fiscal year.

By-Laws

ARTICLE VII
Disposition of Revenues and Receipts

Revenues of the Cooperative for any fiscal year in excess of the amount thereof necessary:

a) to defray expenses of the Cooperative for the operation and maintenance of its facilities during such fiscal year;

b) to pay interest and principal of obligations of the Cooperative coming due in such fiscal year;

c) to finance, or to provide a reserve for the financing of, the construction or acquisition by the Cooperative of additional facilities to the extent determined by the board of directors;

d) to provide a reasonable reserve for working capital;

e) to provide a reserve for the payment of indebtedness of the Cooperative maturing more than one year after the date of the occurrence of such indebtedness in the amount not less than the total of the interest and principal payments in respect thereof required to be made during the next following fiscal year; and

f) to provide a fund for education in cooperation and for the dissemination of information concerning the effective use of electric energy and other services made available by the Cooperative; shall, unless otherwise determined by a vote of the board of directors, be distributed by the Cooperative to its members as patronage refunds pro-rated in accordance with the patronage of the Cooperative by the respective members paid for during such fiscal year. Nothing herein contained shall be construed to prohibit the payment by the Cooperative of all or any part of its indebtedness prior to the date when the same shall become due.

ARTICLE VIII
Disposition of Property

The Cooperative may not sell, mortgage, lease or otherwise dispose of or encumber all or any substantial portion of its property unless such sale, mortgage, lease or other disposition or encumbrance is authorized at a duly held meeting of the members thereof by the affirmative vote of not less than majority of all the members of the Cooperative and unless the notice of such proposed sale, mortgage, lease or other disposition or encumbrance shall have been contained in the notice of the meeting; provided, however, that notwithstanding anything herein contained, the board of directors of the Cooperative, without authorization by the members thereof, shall have full power and authority to authorize the execution and delivery of a mortgage or mortgages or a deed or deeds of trust upon, or the pledging or encumbering of, any and all of the property,assets, rights, privileges, licenses, franchises and permits of the Cooperative, whether acquired or to the acquired and wherever situated, as well as the revenue and income therefrom, all upon such terms and conditions as the board of directors shall determine, to secure any indebtedness of the Cooperative to the United States of America or any instrument or agency thereof, or to any bank, insurance company, or other lending institution.

Furthermore, in addition to any other provisions of these by-laws, or applicable regulations, statues or laws, no proposal for the merger, consolidation, sale, lease, exchange or other disposition of all or any substantial portion of the Cooperative's properties to any third party shall be submitted to the members for a vote thereon unless the terms of such proposal include, at a minimum, the following:

1. the price shall be not less than the fair market value of the assets and business of this Cooperative which shall be established by two independent and expert appraisers and which value shall be at least the average of the said appraisals;

2. the proposal shall contain a provision whereby the acquiring or surviving entity agrees to assume all existing debts and obligations of the Cooperative;
3. the proposal shall contain a provision whereby the acquiring or surviving entity guarantees that the rates, services, and other fees and charges, will be at least equivalent to those provided by the Cooperative and/or the acquiring or surviving entity, whichever is lower at the time of the proposal, and for the reasonably foreseeable future; and
4. the proposal shall contain appropriate protection for the Cooperative's employees

ARTICLE IX
Seal

The corporate seal of the Cooperative shall be in the form of a circle and shall have inscribed thereon the name of the Cooperative and the word "Seal".

ARTICLE X
Financial Transactions

Section 1. Contracts. Except as otherwise provided in these by-laws, the board of directors may authorize any officer or officers, agent or agents to enter into any contract or execute and deliver any instrument in the name and on behalf of the Cooperative, and such authority may be general or confined to specific instances.

Section 2. Checks, Drafts, etc. Except as otherwise provided by law or in these by-laws, all checks, drafts or other instruments for the payment of money, and all notes, bonds or other evidences of indebtedness issued in the name of the Cooperative, shall be signed by such officer, officers, agent or agents, employee or employees of the Cooperative, and in such manner, as shall from time to time be determined by resolution of the board of directors.

Section 3. Deposits. All funds of the Cooperative shall be deposited from time to time to the credit of the Cooperative in such bank or banks as the board of directors may select.

Section 4. Change in Rates. Written notice shall be given to the Administrator of the Rural Utilities Service of the United States of America or its successor not less than ninety days prior to the date upon which any proposed change in the rates charged by the Cooperative for electric energy becomes effective.

Section 5. Fiscal Year. The fiscal year of the Cooperative shall begin and end on the same dates as the calendar year.

By-Laws

ARTICLE XI
Miscellaneous

Section 1. Waiver of Notice. Any member or director may waive, in writing, any notice of a meeting required to be given by these by-laws. The attendance of a member or director at any meeting shall constitute a waiver of notice of such meeting by such member or director, except in case a member or director shall attend a meeting for the express purpose of objecting to the transaction of any business because the meeting shall not have been lawfully called or convened.

Section 2. Rules and Regulations. The board of directors shall have power to make and adopt such rules and regulations, not inconsistent with law, the articles of incorporation or these by-laws, as it may deem advisable for the management, administration and regulation of the business and affairs of the Cooperative.

Section 3. Accounting System and Reports. The board of directors shall cause to be established and maintained a complete accounting system which shall conform, so long as the Cooperative is indebted to the Government or any agency or instrument thereof, to such accounting systems as may from time to time be designated by the Administrator of the Rural Utilities Service of the United States of America or its successor. All accounts of the Cooperative shall be examined by a committee of directors at least four times a year at regular meetings of the board of directors. The board of directors shall also cause to be made a full and complete audit of the accounts, books and financial condition of the Cooperative annually. Such audit reports shall be submitted to the members at the annual meeting next following the completion of the annual audit.

Section 4. By-Laws. The board of directors of the Cooperative shall be responsible for the interpretation and application of these by-laws.

ARTICLE XII
Amendments

The By-Laws may be adopted, amended or repealed by the members or the Board of Directors. The notice of the meeting shall contain a copy of the proposed amendment, alteration or repeal to be considered at the meeting. However, only the members may amend the by-laws when the amendment concerns the dissolution of the Cooperative or the sale, lease or the disposition or other disposition or encumbrance of all or any substantial portion of property belonging to the Cooperative. The Board of Directors shall not adopt any by-laws in conflict with the provisions of R.S. 12:414 or 421.

In the event voting by mail is authorized in the by-laws, the Board of Directors is authorized to prescribe conditions necessary for voting by mail, including the percentage of members required to constitute a quorum. However, only the members may prescribe conditions in the by-laws for voting by mail or the constitution of a quorum when the provisions of the by-laws relate to the dissolution of the Cooperative or the sale, lease, merger or other disposition or encumbrance of all or any substantial portion of property belonging to the Cooperative.

ARTICLE XIII
Rules of Order

Parliamentary procedure at all meeting of the members, of the board of directors, or any committee provided for in these by-laws and of any other committee of the members or board of directors which may from time to time to duly established shall be governed by the most recent edition of Robert's Rule of Order, except to the extent such procedure is otherwise determined by law, these by-laws or the Cooperative's articles of incorporation.

General Service Policies and Conditions

I. General

The term "Cooperative" as used herein shall mean PC ELECTRIC, its successors or assigns; the term "Member: shall mean each present or prospective user of electric services supplied by the Cooperative.

All electric service furnished by the Cooperative shall be subject to the provisions of these General Service Policies and Conditions and to the provisions of the Cooperative's electric service rate schedules.

II. Application for Membership and Service

A written application (or contract) for service may be required, at the Cooperative's option, from any Member and a separate application (or contract) may be required for each point of delivery of services. A Member shall become a member by applying for or receiving electric service from the Cooperative. Each member shall pay the membership fee of $5.00 and be bound by the provisions of the Articles of Incorporation and By-Laws of the Cooperative and by such Rules and Regulations as may from time to time be adopted by the Cooperative.

III. Point of Delivery of Service

Unless otherwise agreed upon, point of delivery of electric service shall be considered that point at which the lines of the Cooperative are connected to Member's service entrance or, in the absence of a service entrance, to the Member's main disconnect switch or bus, and shall be located on the Member's building or other structure nearest the Cooperative's existing lines. Service will be extended by aerial wire over the shortest and most direct route, except that in underground subdivisions all services will be underground. Any Member desiring a routing other than the most direct, shall reimburse the Cooperative for the extra cost incurred. The amount of such cost shall be determined by the Cooperative.

IV. Use of Service

(a) All facilities, except as provided herein, including lines, wiring, apparatus and appliances, beyond the point of delivery shall be furnished, installed, owned and maintained by the Member. Such facilities shall be installed and maintained in a safe and efficient manner and in accordance with good practice and all lawful regulations. The Cooperative, however, does not assume the responsibility of inspecting the Member's facilities.

(b) Motors having a rated capacity in excess of ten horsepower (10 H.P) must be three-phase.

(c) It shall be the responsibility of the Member to provide adequate over current protection in each phase on all motor installations.

(d) It shall be the responsibility of the Member to provide adequate protection against single-phase conditions for all three-phase services. It shall be the responsibility of the Member to provide adequate protection against single-phase conditions for all three-phase utilization equipment.

General Service Policies and Conditions

(e) For all individual motor installations in excess of 250 H.P., the Member shall provide reduced voltage starters that will limit the starting and/or accelerating current to a value acceptable to the Cooperative.

(f) The Member shall be solely responsible for the use and disposition of electricity on the Member's side of the point of delivery. The Member shall protect and save the Cooperative harmless and indemnified from injury or damage to persons or property occasioned by the presence, absence, use and disposition of such electricity on the Member's side of the point of delivery, except where said injury or damage shall be shown to have been caused by the sole negligence of the Cooperative. The Cooperative shall not be responsible for injury to the Member or the Member's employees in tampering with or attempting to repair or maintain any of the Cooperative's facilities on the Cooperative's side of the point of delivery.

(g) All meters shall be furnished, owned, installed, maintained or removed by the Cooperative.
Current and/or potential transformers, when required, will be furnished, owned and maintained by the Cooperative, but the initial installation cost will be at the Member's expense.

(h) Member shall furnish a suitable space, acceptable to the Cooperative, for installation of meters and other equipment necessary to deliver and measure the electricity supplied by the Cooperative. Member shall not injure or tamper with said meter, or other equipment, and shall take all reasonable precautions to prevent others from injuring or tampering with any of the Cooperative's equipment located on Member's premises.

(i) All service furnished is for the exclusive use of the Member and shall not be resold or shared with others without the written consent of the Cooperative.

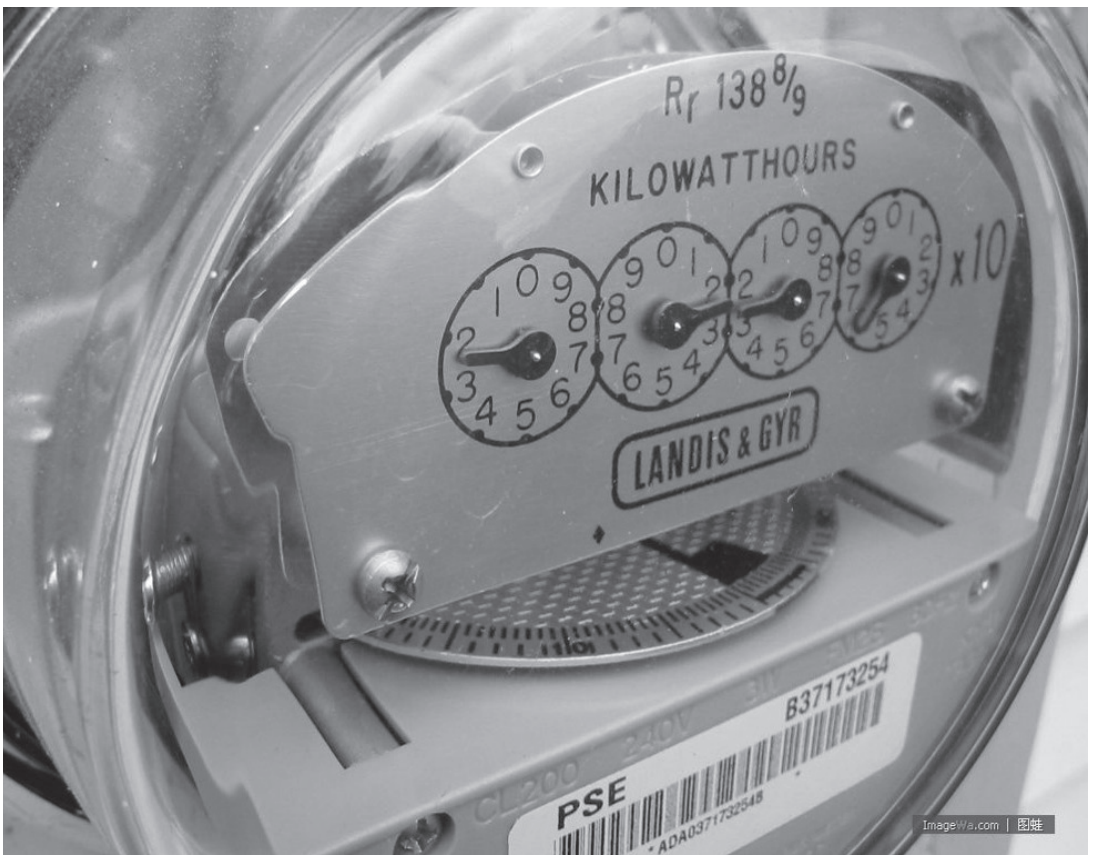

General Service Policies and Conditions

V. Right of Access to Member's Premises

The Cooperative shall have access to the Member's premises at all times, free of all tolls or other charges, for the purpose of:

(a) installing, reading, testing, repairing or removing its meter(s) or metering equipment;

(b) installing, operating, maintaining and/or removing any of its other electric distribution facilities; and for all other purposes necessary to enable the Cooperative to render proper service to the Member and to its other Members.

VI. Rights-of-Way, Permits, and Franchises

The Cooperative's obligation to furnish service shall be contingent upon its ability to secure and retain all necessary franchises, rights-of-way, permits, etc., at costs which the Cooperative considers reasonable. Member shall furnish to the Cooperative, free of all costs, all necessary rights-of-way over land owned or controlled by the Member, and other intervening private property when requested to do so by the Cooperative.

VII. Damages to Cooperative's Facilities

Charges shall be made to all individuals, corporations, or other parties causing damage to the Cooperative's distribution or transmission facilities. Such charges shall cover the cost of all material, labor and overhead associated with repairing the damage.

VIII. Relocation of Cooperative's Facilities

Members or other parties requesting the relocation of any of the Cooperative's facilities that are located on private right-of-way will be required to pay the cost of such relocation. Cost shall include material, labor, overhead and any other associated expenses.

IX. Temporary Service

Temporary service is defined as one, the need for which will exist for a limited period of time, such as, for example, the duration of a particular construction job or other event. Applicants requesting temporary service to any premises will be required to pay in advance the total estimated cost of installation and removal of all service facilities, less estimated salvage value. Cost shall include material, labor, overhead and all other components of electric plant costs as listed in the RUS uniform system of accounts and related instructions. An advance deposit equal to the full amount of the estimated bill for service may, at the Cooperative's option, be required.

General Service Policies and Conditions

X. House and Other Construction Contractors

House and other construction contractors will be required to furnish and install their own temporary meter loop(s) and switch(es) for use during the construction period.

XI. Line and Service Extension Policies and Provisions

Applications for electric service will be classified into one of the following defined classifications and service will be extended accordingly.

A. SINGLE-PHASE SERVICE

1. PERMANENT RESIDENCE

Single-phase electric service will be extended to permanent residences, except as noted in Paragraph XI.A.5, up to one-thousand (1,000) feet at regularly established rates and minimum charges, upon request and payment of the membership fee. For extensions beyond 1,000 feet, the Cooperative will require one of the following:

(a) A non-refundable contribution of aid in construction equal to the total cost of construction, including cost of removal less any salvage value, of all facilities in excess of 1,000 feet; or

(b) A monthly facilities charge, in addition to the regularly established minimum in the applicable rate schedule, equal to 1.658% of the total cost of construction, including cost of removal less any salvage value, of all facilities in excess of 1,000 feet.

This facilities charge shall be paid monthly for a period of six (6) years. In the event other members shall subsequently locate on an extension covered hereunder, it shall be the discretion of the Cooperative to determine the amount, if any, by which the cost of any such extension will be shared.

A permanent residence shall be defined as any single-family dwelling unit occupied on a permanent year-round basis, excepting mobile homes located outside of mobile home parks or subdivisions. This policy does not apply to temporary types of services (as defined in Paragraph IX), or to services to moveable types of premises (such as campers or houseboats), or to services for water pumps, barns, camps, seasonal residences or similar types of installation.

For service to premises not located within 1,000 feet of existing lines, the Cooperative may require the applicant to sign a contract for such service and/or to pay a minimum monthly (or annual) charge greater than the regularly established minimum provided for under the applicable rate schedule.

General Service Policies and Conditions

2. PERMANENT NON-RESIDENTIAL ESTABLISHMENTS

Single-phase electric service will be extended to permanent non-residential establishments having a load of 50 kilowatts or less pursuant to Paragraph XI.A.1 Extension of service to loads in excess of 50 kilowatts will be considered on an individual basis.

3. MOBILE HOMES

(a) Single-phase electric service will be extended to permanent mobile homes located outside mobile home parks, subdivisions or developments in accordance with Paragraph XI.A.1, except as noted in Paragraph XI.A.5. A mobile home will be classified as permanent if:

(1) The applicant provides evidence of ownership of the property on which the mobile home is located;

(2) The consumer provides evidence of ownership of the mobile home; and

(3) The mobile home is situated on a permanent foundation and has installed a permanent pressure water supply and sanitary waste disposal system for the mobile home prior to the extension of service.

(b) Mobile homes not meeting the above criteria will be considered nonpermanent or temporary. An initial (or 1st time) service, not in excess of 200 feet, will be extended to any such non-permanent mobile home at regularly established rates and minimum charges, except as noted in Paragraph XI.A.5 of these General Service Policies. For an initial extension in excess of 200 feet, the applicant will be required to make a non-refundable contribution in aid of construction equal to the total cost of construction, including removal cost less estimated salvage value, of those facilities in excess of 200 feet.

Any non-permanent mobile home member who relocates his/her mobile home (whether the same one or a replacement one) and thereby requires a new service to be run (a prior service having been provided at his/her former location) will be required to pay a non-refundable cash contribution equal to the cost of such new service, including removal cost less estimated salvage value, but in no case shall such contribution be less than $60.00 ($100.00 if a transformer has to be installed). Any such contribution charge shall be made in addition to any deposit or service charge made or required under any of the provisions of our Billing and Collecting Policies. The term "Cost" shall exclude the bare cost of any transformer involved.

The provisions of the above-written paragraph will be applied to a non-permanent mobile home member who moves off the Cooperative's lines, but returns in less than two (2) years and requires a new service to be run.

4. PUMPS, BARNS, CAMPS, SEASONAL RESIDENCES AND SIMILAR INSTALLATIONS

Single-phase electric service will be extended to these premises at regularly established rates and minimum charges for extensions not to exceed 200 feet, except as noted in Paragraph XI.A.5.

For extensions in excess of 200 feet, the Cooperative, at its option, will require one of the following:

(a) A non-refundable contribution in aid of construction equal to the total cost of construction, including cost of removal less any salvage value, of all facilities in excess of 200 feet; or

(b) A monthly facilities charge, in addition to the regularly established minimum in the applicable rate schedule equal to 1.934% of the total cost of construction, including cost of removal less any salvage value, of all facilities in excess of 200 feet.

These facilities charges shall be paid monthly for a period of five (5) years. In the event other members subsequently locate on an extension covered hereunder, it shall be the discretion of the Cooperative to determine the amount, if any, by which the cost of any such extension will be shared.

5. ATCHAFALAYA BASIN LEVEE DISTRICT

Service to premises located South of Ramah, Louisiana, on land for which an easement is held by the Atchafalaya Basin Levee District or assigns for the purpose of building and maintaining the East Atchafalaya basin protection levee and which, under the provisions of such easement, said Atchafalaya Basin Levee District could at any time request or order the removal, at the Cooperative's expense, of any facilities installed on such property, will be extended provided that:

(a) Permission can be obtained by the Cooperative from the Atchafalaya Basin Levee District or assigns and from any property owner(s) whose property would be affected by the extension;

(b) Existing facilities of the Cooperative from which service can be provided are available in the general area;

(c) A non-refundable contribution in aid of construction equal to the total estimated cost of construction and removal of required facilities to service the premises in question is paid by the applicant(s). (No ownership or other rights in the facilities constructed shall vest in the applicant(s) by reason of having made a contribution.); and

(d) The total cost of any subsequent charge, rearrangement or relocation of facilities required by direction or order of said Atchafalaya Basin Levee District or assigns will be charged to and born by the member(s) being served by the affected facilities.

B. THREE-PHASE SERVICE

Three-phase electric service will be provided to permanent establishments at regularly established rates and minimum charges when such service can be initially supplied from the Cooperative's then existing distribution lines of adequate capacity. Three-phase service requiring the construction of additional facilities will be extended only upon such terms and conditions as specified in a written contract executed in advance of extending such service.

General Service Policies and Conditions

C. **GENERAL POLICIES AND PROVISIONS**

Line and service extensions covered under the provisions of Paragraphs XI.A. and XI.B. will be subject to the following general policies and provisions:

1. The term "cost" as used in association with all facilities extensions will include cost of labor, materials, overhead, easements or permits, and right-of-way clearing, all based upon the uniform systems of accounts prescribed by the Rural Utilities Service (RUS).

2. The Cooperative, at its option, may require a written contract to be executed prior to the extension of service.

3. Yard lights, street and highway lights will generally be installed under the terms and provisions of the applicable street and yard light rate schedule.

4. All line and service extensions will generally be overhead type construction. Request for the installation of underground facilities will be considered under the provisions of Paragraph XII.

5. No power (KW) or energy (KWH) usage will be included or allowed in any facilities charge.

6. The type and capacity of service rendered hereunder will be limited to that existing and generally available in the area in which the premises are located.

7. All line extensions, service wire and connections, regardless of contributions in aid of construction made toward paying the cost thereof, are to be made by the Cooperative and remain the property of the Cooperative.

8. All property of the Cooperative placed in or upon the member's premises, used in supplying service to the member, is placed there under the member's protection.

9. Where reference is made to line extensions, especially as these extensions are defined by distance, such extensions are for primary and secondary facilities only.

10. Any line and service extension not specifically defined hereunder will be considered on an individual basis.

General Service Policies and Conditions

XII. Underground Service and Facilities

A. **SUBDIVISIONS**

A developer who requests the installation of underground facilities in a subdivision or other area will be required to pay the estimated difference in cost between underground facilities and overhead or aerial facilities. In the absence of, and as an alternative to, such a payment, each member in such a subdivision will be subject to the cooperative's rate schedule riders designated as UR#1 and SYL#1.

B. **OTHER UNDERGROUND SERVICES OR FACILITIES** (Not in Subdivisions)

Any Member requesting the installation of underground service or facilities will be required to pay the estimated difference in cost between underground facilities and overhead facilities, or alternatively may provide and install conduit from the Cooperative's line to the member's load center per Cooperative specifications.

C. **OTHER PROVISIONS**

1. Charges made under the provisions of Paragraphs XII.A. and XII.B. above-written will be in addition to any other applicable charges.

2. The estimated difference in cost between underground and overhead facilities for any particular job will be determined by the Cooperative. A copy of the Cooperative's computations may be furnished to the developer or the Member upon request.

3. In underground subdivisions, only one service per lot will be installed pursuant to Paragraph XII.A. above-written. Any additional service(s) will be installed at the expense of the Member.

4. Footage limitation for line and service extensions contained in Paragraph XI are also applicable to underground extensions.

XIII. Service Interruptions

The Cooperative shall use due diligence in the operation and maintenance of its facilities so as to provide safe, adequate and uninterrupted service; but in case of cessation, deficiency, variation in voltage, or any other failure or reversal of the service resulting from injunction, fire, riot, strike, explosion, flood, windstorms, accident, breakdown, forces of nature, act of God or the public enemy or other acts or conditions reasonably beyond the control of the Cooperative, the Cooperative shall not be liable for damages, direct or consequential resulting from such interruption or failure.

The Cooperative shall not be liable for damages occasioned by interruption of service, when such interruptions are necessary to make repairs or changes, or improvements in the Cooperative's equipment and facilities.

General Service Policies and Conditions

XIV. Suspension of Service

(a) The Cooperative may suspend service to any member at any time for unauthorized tampering with its facilities. In case of fraud, service will not be restored until proper and adequate restitution is made to the Cooperative.

(b) Service may also be suspended for any of the following reasons:

(1) Violation of the Cooperative's rules and regulations;

(2) Breach of contract between the Cooperative and the Member;

(3) Failure to provide the Cooperative reasonable access to its equipment;

(4) The existence of a condition on the Member's premises that would generally be considered hazardous to the Member or the general public or that might interfere with the proper operation of the Cooperative's facilities;

(5) Non-payment of a bill;

(6) Due to high water in flood zone areas.

XV. Modifications

No agent of the Cooperative has the power to amend, modify, alter or waive any of these General Service Policies and Conditions or to bind the Cooperative by making any promises or representations that conflict with the provisions of these General Service Policies and Conditions.

Whenever there is a conflict between the provisions of any of the requirements herein and the specific provisions of any rate schedule, the provisions of the rate schedule shall govern.

Billing and Collection Policies

I. Billing and Meter Reading

Member bills for electricity shall be prepared and mailed, or otherwise delivered, on a monthly basis.

All meters, except those not readily accessible, shall be read by the Cooperative each month. Readings shall be estimated for those that are not read, but Cooperative personnel shall make periodic readings of such meters. Adjustments in billings will be made where necessary as indicated by these periodic readings.

II. Failure to Receive a Bill

The failure of any member to receive his/her bill for any month or months shall not relieve such member from the obligation of paying such bills allegedly not received.

III. Failure to Prepare a Bill

Notwithstanding Section I listed above, failure by the Cooperative to prepare and forward a bill for any month, or months, for any member shall not relieve such member of the obligation of paying any sums for which he/she was subject to being billed.

IV. Non-Payment of Bills

Any member failing to pay his/her bill within twenty (20) days following the mailing of such bill will be sent a notice of disconnection. Such notice will be specific in nature, indicating the Cooperative's intentions to disconnect service for non-payment. A specific date of disconnect will be given and in all cases such notice of discontinuance will be at least five (5) days in advance of the actual termination of service. Service shall not be reconnected without full payment of the delinquent bill, the final billing, the applicable service charges provided for in Section V (a) below and any additional deposit that the cooperative deems justified. Payment is due and must be received at the Cooperative office by close of business on the due date indicated on the bill card. Any payment not received when due will be charged a 5% late fee.

V. Service Charge

All service charges are non-refundable.

(a) Any member who requests a re-connection after having been disconnected for non-payment shall be required to pay a service charge in the amount of not less than $60.00, provided such re-connection is or can be made during regular working hours. The service charge for re-connection during all other hours shall be $80.00. These charges are in lieu of those provided for in Section V (d) below. Cooperative personnel do not accept payments on personal visits.

An account shall be considered delinquent when payment has not been received in the Cooperative's office within the time limit prescribed in Section IV above.

Billing and Collection Policies

(b) (1) Any check that is returned by a depository bank and that is marked "Non-Sufficient Funds" (N.S.F.) or "Account Closed" will not be re-deposited nor will a notice be sent informing this member of said returned check. The amount of the returned check will be debited to the member's account who received credit for said check. A service charge of $25.00 will be made to the member from whom a "N.S.F." or "Account Closed" check is received.

(2) Service will be discontinued without notice if payment in the full amount of a returned "N.S.F." check and the applicable service charge provided for in Paragraph (b) (1) above is not received at the Cooperative's office within three (3) working days after the receipt of the returned check from the depository bank. For returned checks marked "Account Closed", service will be discontinued immediately without notice and the applicable $25.00 service charge will apply along with the appropriate re-connection charges if service is resumed.

(3) Service shall not be reconnected without full payment of the amount of the returned check, applicable service charges, any other billings and any additional deposit that the Cooperative deems justified.

(c) A service charge in the amount of $50.00 will be made for trouble calls whenever the source of the trouble is found in the member's wiring or other electrical equipment.

(d) A service (or connect) charge in the amount of $20.00 will be made for all connections, including new connects and relocations, but excluding reconnects and meter exchanges, that are or can be made during regular working hours. The charge for connection during all other hours shall be $60.00. This charge will be in addition to any other charge(s) that may be applicable. Reconnects will be subject to the provisions of Section V (a).

(e) A service charge in the amount of $10.00 will be made for any new security light installation. This charge shall be in addition to any other charge(s) that may be applicable.

(f) New members locating on Old River, on the unprotected side of the Mississippi River levee or in the Atchafalaya Floodway Basin shall pay a one time connect charge of $25.00 for each new connect. This charge will be made in lieu of the connect charge as stated in Section V (d). This charge will not apply to consumers who are re-connected after disconnection due to high water and return to the same service point. If a new service has to be constructed, a non-refundable contribution of $35.00 or more will be charged. For a member who has more than one service, the charge(s) provided for herein shall apply to each service.

Any member requesting temporary service elsewhere, pending subsidence of high water and return to a location inside the levee, will be charged for the up and down cost of such temporary service, but in no case less than $60.00 ($100.00 if a transformer has to be installed). A service (or connect) charge will also be made for any such temporary connection as provided for in Section V (d) above.

Billing and Collection Policies

VI. Membership Fees and Deposits

(a) General Provisions

Membership fees and deposits shall be paid by all members in accordance with Section 4, Article 1 of the By-Laws of this Cooperative. Non-members may also be required to meet the provisions of said Section 4, Article 1 of the By-Laws.

Membership fees and deposits are to be recorded in the Cooperative's records only under the name of the person in whose name the account is listed. Each deposit or membership fee shall be assigned to and associated with a particular account number. All deposits and membership fees shall be non-transferable as between members.

Deposits based on residential member credit classification as discussed in Section VI (d) will be refunded when the account is closed. All other deposits will be refunded upon the completion of 12 months of perfect credit history.

Refunding of membership fees and deposits shall be made only to the person under whose name is listed in the Cooperative's records. Before any such refund is made, any debt due the Cooperative shall be applied against the deposit or membership fee.

(b) For all Services on Old River

Each new service on Old River, located on the floodway side of the levee, will require a $35.00 non-refundable contribution. A member who has made a contribution, but who relocates elsewhere and thereby requires a new service to be run, will be required to pay another $35.00 for such new service. A newcomer serviced through an existing vacant service will not be required to pay a contribution. **In other words, the contribution goes with the service and not with the member.** These provisions shall apply regardless of the type of premises to be served.

All services in the area covered by the above-written paragraph, or in other areas subject to water flooding, are, in the event of high water conditions, subject to disconnection at the sole discretion of this Cooperative.

(c) Additional Deposits

The Cooperative may require, at its discretion, an additional cash deposit for any account connected on its lines. The amount of the deposit will be in multiples of $5.00 and should generally be sufficient to cover an estimated three-months billing, but may be more or less if circumstances warrant a different charge.

(d) Minimum Required Deposits

The following is a schedule of minimum required deposits (including the Membership Fee) for the type of premises indicated.

(1) All deposits for Residential Premises whether owned or rented are based upon a member's credit classification as identified by ONLINE Information Services. In addition to the $5.00 Membership Fee, the deposits for the credit classifications are as follows.

Low Risk	No Deposit
Medium Risk	$150.00
High Risk	$300.00

(2)	All Camps (regardless of type of premises or location)	$ 50.00
(3)	All Other Premises (other than commercial or industrial)	$ 25.00
(4)	All subsequent meters of non-commercial premises for active members in good standing	$ 5.00

VII. Changing of Meters

The Cooperative may, at its discretion, change out any meter on its system without consulting the member served by such meter.

VIII. Checking of Meters

A meter will be removed and checked for accuracy when requested by the member. If the meter is found to be accurate within tolerance limits of plus or minus 2%, a service charge in the amount of $25.00 shall be charged to the member who requested the check, including the charge in Paragraph VII (a) above.

Should the meter not check within these tolerance limits, no service charge will be made and an approximate adjustment will be made in the billing for the period of inaccurate registration if such a period can be determined. Otherwise, the adjustment period will be mutually agreeable to the member and Cooperative. In no event, however, shall the adjustment period be more than six months.

IX. Periodic Disconnects

Any account that is disconnected by member request and is reconnected within one year from the date of disconnect will be charged a minimum billing for the period of disconnect.

X. Modifications

No agent of the Cooperative has the power to amend, modify, alter or waive any of these Billing and Collection Policies or to bind the Cooperative by making any promises or representations that conflict with the provisions thereof.

Whenever there is a conflict between the provisions of these Billing and Collecting Policies and the specific provisions of any rate schedule, the provision of the rate schedule shall govern.

Payment Options

Pay by Mail

Mail payments to: PC Electric; P. O. Box 160; New Roads, LA 70760.

Payment Drop Box

Available 24 hours a day through the front door at Headquarters Office Building (2506 False River Drive; New Roads, LA). NO CASH PLEASE!

Pay by Phone

Dial 1-877-831-6383. Then follow the prompts.

Pay Online

Go to our website at www.pcemc.org and click on the Pay Online button, powered by Paymentus.

PC Electric offers payment by credit card, debit card, or electronic check online or by telephone at 1-877-831-6383. You can pay 24 hours a day. (Convenience fee applies. Please see fee structure below.)

Convenience Fee:
PC Electric has partnered with an online credit/debit card payment service provider, who will process your payment on our behalf. A convenience fee of $3.50 for any payment up to $250.00 will apply. If you pay more than $250.00, an additional $3.50 will be charged. (You will have the option of canceling your transaction after seeing or hearing the exact convenience fee amount.)

Payments will only be accepted up to $250.00 per transaction. Therefore, if your payment is larger than $250.00, you will need to make more than one transaction and you will be charged a $3.50 fee for each transaction.

The fee for payment via electronic check is $3.50. The fee is collected and retained by our online credit/debit payment service provider.

PC Electric does not receive any proceeds from the convenience fee.

You may use this service to make a partial payment on your bill, but you will be charged a separate fee each time.

How To Make Payments Online

Pay by Credit Card instructions:

The following are step-by step instructions for making payments online. Note that you have the option to cancel the payment after you enter your credit card information.

Go to our website at www.pcemc.org and click on the pay online button to pay your bill:

1. Enter the contact information and the designated fields. Required fields are marked with a red triangle.

2. Enter your e-mail address information so you can receive a confirmation of payment.

3. Enter your credit card information.

4. Enter the amount you wish to pay.

5. Click on "Continue" to see the amount that will be charged to your credit card, including the convenience fee.

6. The page that appears will show your energy payment, the convenience fee, and the total amount that will be charged to your credit/debit card. This page also gives you the option of accepting or canceling the transaction. This is your last chance to cancel.

7. If you click "Make Payment" you will receive a payment confirmation page listing your billing information and a confirmation number. Please note the confirmation number in case you have any questions later.

Security:

Our online credit/debit card payment service uses 128-bit encryption, one of the industry's most secure transaction environments. PC Electric does not retain credit card numbers or credit card account information.

How To Read Your Bill

To read your new bill format, follow the numbers for a guide to your new billing format

1. How to contact PC Electric.
2. Important services information.
3. Your PC Electric account number, location information and billing dates.
4. Convenient services.
5. Payment activity since your test bill.
6. Billing Summary shows all charges for your account in detail.
7. Message Center.
8. Payment activity since your test bill.
9. Due date and amount due.

Please turn over to view
how to read the back of your bill.

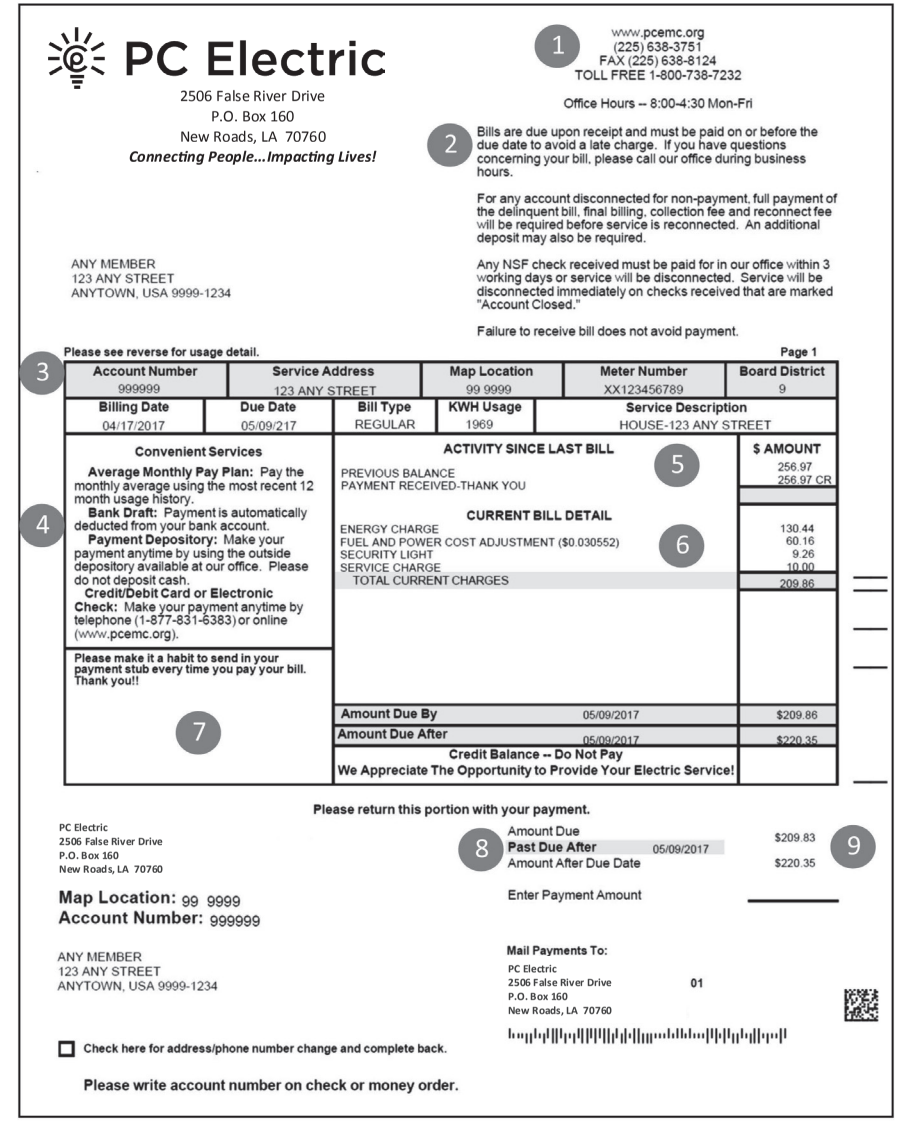

PC Electric

2506 False River Drive
P.O. Box 160
New Roads, LA 70760
Connecting People...Impacting Lives!

1 www.pcemc.org
(225) 638-3751
FAX (225) 638-8124
TOLL FREE 1-800-738-7232

Office Hours -- 8:00-4:30 Mon-Fri

2 Bills are due upon receipt and must be paid on or before the due date to avoid a late charge. If you have questions concerning your bill, please call our office during business hours.

For any account disconnected for non-payment, full payment of the delinquent bill, final billing, collection fee and reconnect fee will be required before service is reconnected. An additional deposit may also be required.

Any NSF check received must be paid for in our office within 3 working days or service will be disconnected. Service will be disconnected immediately on checks received that are marked "Account Closed."

Failure to receive bill does not avoid payment.

ANY MEMBER
123 ANY STREET
ANYTOWN, USA 9999-1234

Please see reverse for usage detail. Page 1

3

Account Number	Service Address	Map Location	Meter Number	Board District
999999	123 ANY STREET	99 9999	XX123456789	9

Billing Date	Due Date	Bill Type	KWH Usage	Service Description
04/17/2017	05/09/217	REGULAR	1969	HOUSE-123 ANY STREET

4 **Convenient Services**

Average Monthly Pay Plan: Pay the monthly average using the most recent 12 month usage history.
Bank Draft: Payment is automatically deducted from your bank account.
Payment Depository: Make your payment anytime by using the outside depository available at our office. Please do not deposit cash.
Credit/Debit Card or Electronic Check: Make your payment anytime by telephone (1-877-831-6383) or online (www.pcemc.org).

Please make it a habit to send in your payment stub every time you pay your bill. Thank you!!

7

5 **ACTIVITY SINCE LAST BILL**

	$ AMOUNT
PREVIOUS BALANCE	256.97
PAYMENT RECEIVED-THANK YOU	256.97 CR

6 **CURRENT BILL DETAIL**

ENERGY CHARGE	130.44
FUEL AND POWER COST ADJUSTMENT ($0.030552)	60.16
SECURITY LIGHT	9.26
SERVICE CHARGE	10.00
TOTAL CURRENT CHARGES	209.86

Amount Due By	05/09/2017	$209.86
Amount Due After	05/09/2017	$220.35

Credit Balance -- Do Not Pay
We Appreciate The Opportunity to Provide Your Electric Service!

Please return this portion with your payment.

PC Electric
2506 False River Drive
P.O. Box 160
New Roads, LA 70760

Map Location: 99 9999
Account Number: 999999

ANY MEMBER
123 ANY STREET
ANYTOWN, USA 9999-1234

8 Amount Due $209.83
Past Due After 05/09/2017
Amount After Due Date $220.35

9

Enter Payment Amount _____

Mail Payments To:
PC Electric
2506 False River Drive 01
P.O. Box 160
New Roads, LA 70760

☐ Check here for address/phone number change and complete back.

Please write account number on check or money order.

How To Read Your Bill

The back of your bill contains the following important information

10. Meter number and meter reading information.

11. Bill line item descriptions.

12. This graph illustrates 24 months of energy usage.

13. This chart compares kWh usage and cost.

14. What to do when your service is interrupted.

15. Change of Address and/or Phone Number Notification Area.

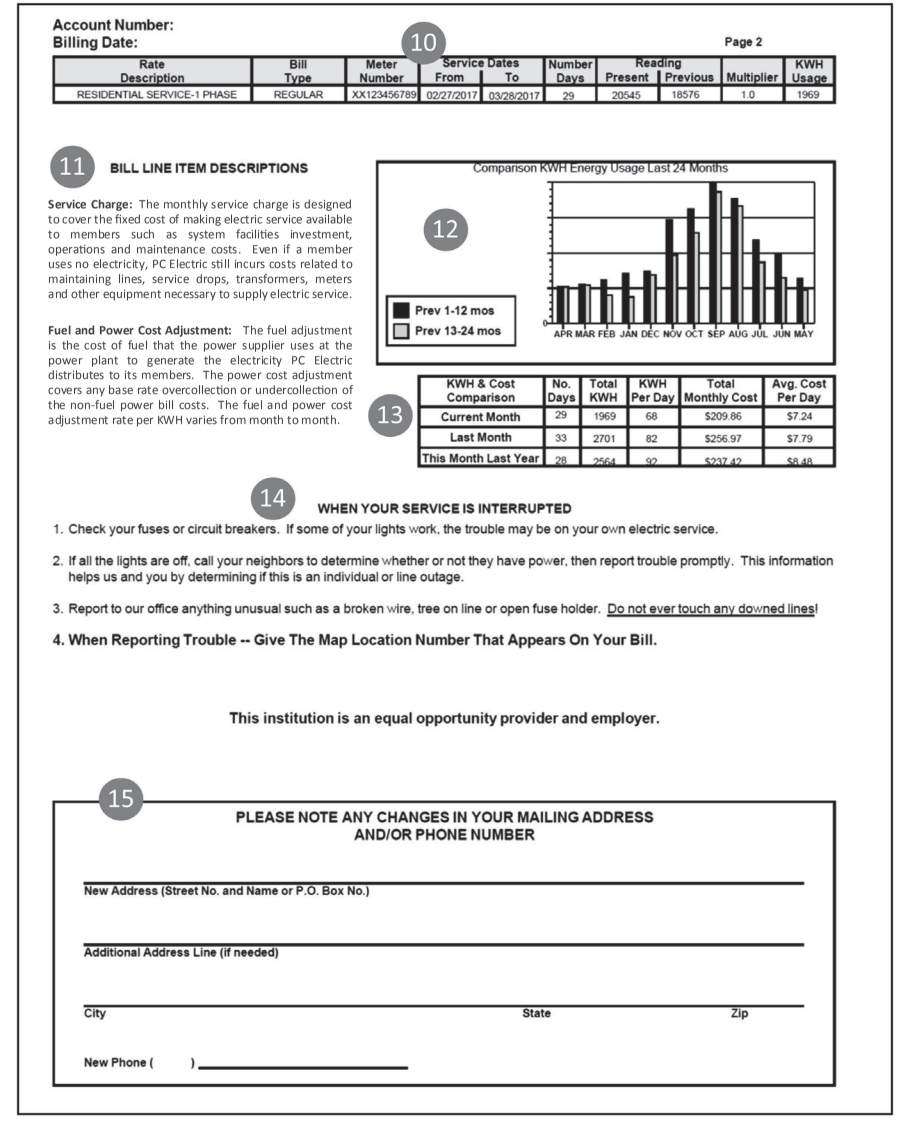

Account Number:
Billing Date:

10

Page 2

Rate Description	Bill Type	Meter Number	Service Dates From	Service Dates To	Number Days	Reading Present	Reading Previous	Multiplier	KWH Usage
RESIDENTIAL SERVICE-1 PHASE	REGULAR	XX123456789	02/27/2017	03/28/2017	29	20545	18576	1.0	1969

11 **BILL LINE ITEM DESCRIPTIONS**

Service Charge: The monthly service charge is designed to cover the fixed cost of making electric service available to members such as system facilities investment, operations and maintenance costs. Even if a member uses no electricity, PC Electric still incurs costs related to maintaining lines, service drops, transformers, meters and other equipment necessary to supply electric service.

Fuel and Power Cost Adjustment: The fuel adjustment is the cost of fuel that the power supplier uses at the power plant to generate the electricity PC Electric distributes to its members. The power cost adjustment covers any base rate overcollection or undercollection of the non-fuel power bill costs. The fuel and power cost adjustment rate per KWH varies from month to month.

Comparison KWH Energy Usage Last 24 Months

12

Prev 1-12 mos
Prev 13-24 mos

0

APR MAR FEB JAN DEC NOV OCT SEP AUG JUL JUN MAY

13

KWH & Cost Comparison	No. Days	Total KWH	KWH Per Day	Total Monthly Cost	Avg. Cost Per Day
Current Month	29	1969	68	$209.86	$7.24
Last Month	33	2701	82	$256.97	$7.79
This Month Last Year	28	2564	92	$237.42	$8.48

14 **WHEN YOUR SERVICE IS INTERRUPTED**

1. Check your fuses or circuit breakers. If some of your lights work, the trouble may be on your own electric service.
2. If all the lights are off, call your neighbors to determine whether or not they have power, then report trouble promptly. This information helps us and you by determining if this is an individual or line outage.
3. Report to our office anything unusual such as a broken wire, tree on line or open fuse holder. Do not ever touch any downed lines!
4. **When Reporting Trouble -- Give The Map Location Number That Appears On Your Bill.**

This institution is an equal opportunity provider and employer.

15

PLEASE NOTE ANY CHANGES IN YOUR MAILING ADDRESS AND/OR PHONE NUMBER

New Address (Street No. and Name or P.O. Box No.) _____

Additional Address Line (if needed) _____

City _____ State _____ Zip _____

New Phone ( ) _____

PC Electric

PO Box 160
New Roads, LA 70760

225-638-3751 • 1-800-738-7232

Office Hours:
Monday-Thursday 8:00 a.m. - 4:30 p.m.
Friday 8:00 a.m. - 3:30 p.m.

www.pcemc.org

Payment Options

Automatic Bank Draft

PC Electric
Connecting People...Impacting Lives!

2506 False River Drive • P.O. Box 160
New Roads, LA 70760
Phone (225) 638-3751 • Fax (225) 638-8124
Toll Free 800-738-7232
www.pcemc.org

BANK DRAFT AUTHORIZATION FORM

I _____hereby authorize PC Electric to debit my bank account in payment of my electric bill each month for the accounts listed below and to make any necessary adjustments in case of error. I have attached a voided or canceled check with my name, the name of my bank, my bank account number and the bank routing number printed on it. (Please do not attach a deposit slip since they do not contain the necessary information needed to use this service.) I will notify PC Electric in sufficient time to change the drafting instructions if I should change or close my bank account.

Electric Account(s)

_____ _____

_____ _____

_____ _____

_____

Signed Date

All debits will occur on the first business day of the month!

Jimmy Ewing, Jr., President • George G. LaCour, Jr., Vice President • Ralph B. Chustz, Sr., Secretary /Treasurer
Al Ewing • Peter Rumfola, Jr. • Chris Settoon • Eric Elliott • Myron Lambert, General Manager

Payment Options

Average Monthly Bill Pay

PC Electric
Connecting People...Impacting Lives!

2506 False River Drive • P.O. Box 160
New Roads, LA 70760
Phone (225) 638-3751 • Fax (225) 638-8124
Toll Free 800-738-7232
www.pcemc.org

PC Electric's Average Monthly Pay Plan

PC Electric is now accepting applications for our average monthly payment plan. Under this plan your account will be averaged each month using the most recent 12 month usage history and that is the amount you will be billed. This will result in a more consistent bill each month for our members.

The plan encompasses the following eligibility requirements:

1. Available for residential accounts only.
2. You must have lived at the current address for at least 12 months.
3. Disconnection for any reason will disqualify your account.
4. Full payment of amount owed will become due upon disconnections.
5. PC Electric reserves the right to reject or remove any account from this plan at any time.
6. Nonpayment of full budget amount billed will disqualify your account.
7. Disqualification or voluntary withdrawal from this plan will result in the total outstanding debt becoming current and due.

To apply for this plan, please complete the section below and return to PC Electric; P. O. Box 160; New Roads, LA 70760.

Please place account number _____ on the average monthly payment plan.
I have read and agree to abide by the requirements stated above.

_____ _____ _____

Name Date Phone

For PC Electric use only

_____ Approved _____Denied

_____ _____

PC Electric Representative Date

Jimmy Ewing, Jr., President • George G. LaCour, Jr., Vice President • Ralph B. Chustz, Sr., Secretary /Treasurer
Al Ewing • Peter Rumfola, Jr. • Chris Settoon • Eric Elliott • Myron Lambert, General Manager

Meter Loop Specifications

Rev 4: November 9, 2017

PC ELECTRIC

SINGLE PHASE – 120/240V – 200 AMPS OR LESS
METER LOOP SPECIFICATIONS
PERMANENT OVERHEAD SERVICE FOR MOBILE HOMES

METER LOOP MUST BE INSTALLED FOR STAKING ENGINEER TO STAKE!

GENERAL REQUIREMENTS:

1. Member is responsible for installing and maintaining all equipment beyond the point of service, except the meter, in accordance with the National Electrical Code.
2. Member is responsible for load capacity including future loads.
3. This drawing is illustrative of generally acceptable standards. It shall be the responsibility of the member to construct and maintain the electrical service in a safe manner. Before any connection can be made, PCEMC's field service personnel will evaluate the installation for readiness. If required by local code, the installation must first be inspected, approved and tagged by the local governing authority. In any event, PCEMC reserves the right not to make the connection if PCEMC does not consider the installation to be in accordance with these Specifications.
4. Electrical connections to mobile homes can produce hazardous voltage on the shell of the home, appliances or other metal parts if the installation is not done properly. Use qualified electrician and install the electrical service in accordance with the National Electrical Code.
5. Meter pan height shall be 5'–6" above ground and face away from mobile home to ensure that the meter reader will be able to see the meter face.
6. LOUISIANA ONE CALL (800) 272–3020 should be called prior to digging.
7. Service Pole and Trailer must be at least 10' away from primary line.

Legend:

A) Weatherhead.

B) Service entrance conductors, copper only.

C1) Pole grounding conductor, copper only, bare.

C2) Ground rod clamps: Acorn type below grade. Each ground wire must have its own clamp.

C3) Ground rod 8' long, 1/2" dia. copperweld or 5/8" dia. galv. installed flush with or below grade.

D) Conduit straps: Min. 3, galv.

E) Pole: Min. 20' long, 5" dia. top, or 6"x6" min. square pole, pressure treated creosote, penta or CCA process only.

F) Galvanized or Schedule 80 PVC conduit and fittings, 10' min.

G) Service main disconnect: Circuit breaker recommended, fused switch acceptable, raintype enclosure.

H) Staples, copper, copperweld or equivalent, 6" apart.

J) Min. 5'–0" but not more than 30'–0" from unit, clear of windows, doors and other buildings or coverings.

K) Schedule 80 PVC or galvanized from main disconnect to mobile home.

L) Trailer must be grounded with minimum #6 bare copper wire.

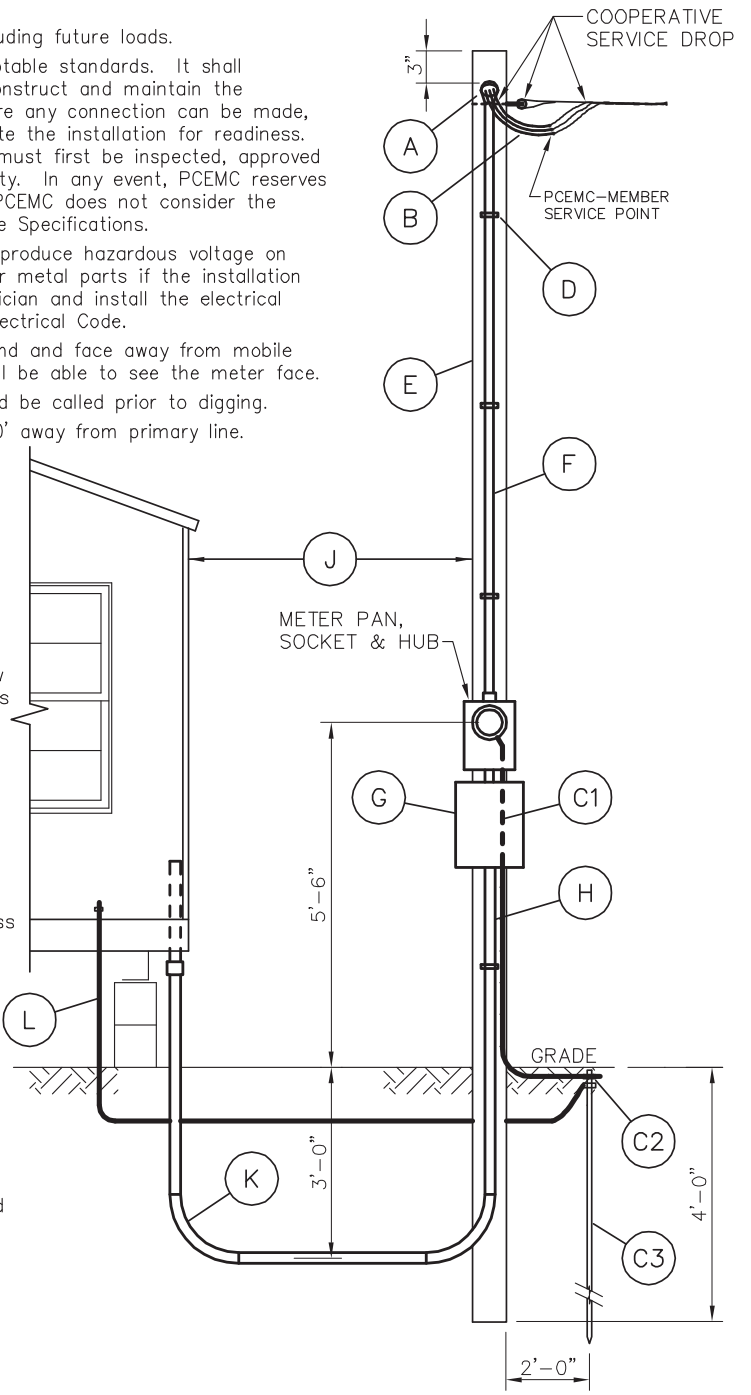

BHA: PCESERV1_CUSTOMER.DWG DSF=32 11/09/17 @ 03:33PM BY #109

Meter Loop Specifications

Rev 4: November 9, 2017

PC ELECTRIC

SINGLE PHASE – 120/240V – 200 AMPS OR LESS
METER LOOP SPECIFICATIONS
UNDERGROUND SERVICE ENTRANCE

METER LOOP MUST BE INSTALLED FOR STAKING ENGINEER TO STAKE!

GENERAL REQUIREMENTS:

1. Member is responsible for installing and maintaining all equipment except the meter, in accordance with the National Electrical Code.
2. Member is responsible for load capacity including future loads.
3. This drawing is illustrative of generally acceptable standards. It shall be the responsibility of the member to construct and maintain the electrical service in a safe manner. Before any connection can be made, PCEMC's field service personnel will evaluate the installation for readiness. If required by local code, the installation must first be inspected, approved and tagged by the local governing authority. In any event, PCEMC reserves the right not to make the connection if PCEMC does not consider the installation to be in accordance with these Specifications.
4. Use qualified electrician and install the electric service in accordance with the National Electrical Code.
5. Meter pan height shall be 5'–6" above ground.
6. LOUISIANA ONE CALL (800) 272–3020 should be called prior to digging.
7. House must be at least 10' away from primary line.

Legend:

A) Not used.

B) Member's conductors, copper only.

C1) Grounding conductor, copper only, bare in wall or, if exposed, in 1/2" conduit, securely fastened to wall.

C2) Ground rod clamps: Acorn type below grade.

C3) Ground rod 8' long, 1/2" dia. copperweld or 5/8" dia. galv. installed flush with or below grade.

D) Conduit straps.

E) Not used.

F) Sch. 80 PVC or rigid galvanized conduit above grade, smooth bushing or bell on end of conduit. Sch. 40 below grade.

G) The service disconnecting means shall be located at a readily accessible location either outside the building or structure or inside nearest the point of entrance of the service conductors.

H) 90° sweep, 36" minimum radius elbow.

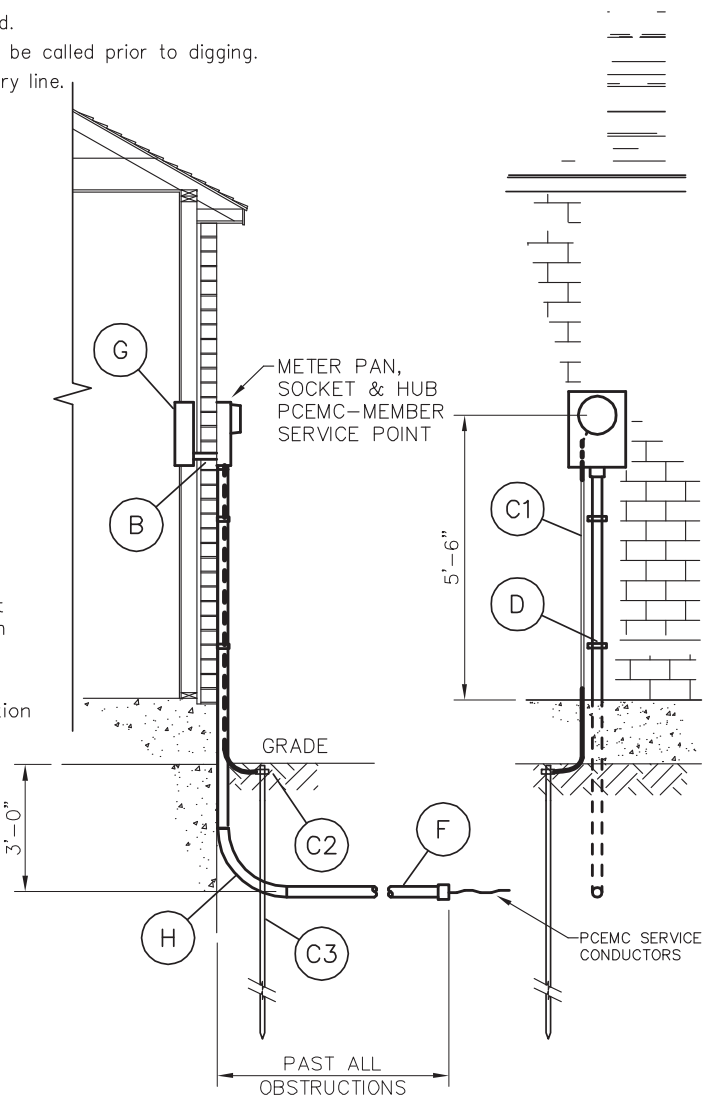

BHA: PCESERV2_CUSTOMER.DWG DSF=32 11/09/17 @ 03:35PM BY #109

Meter Loop Specifications

Rev 4: November 9, 2017

PC ELECTRIC

SINGLE PHASE – 120/240V – 200 AMPS OR LESS
METER LOOP SPECIFICATIONS
UNDERGROUND SERVICE ENTRANCE – MEMBER FURNISHED & INSTALLED CONDUIT

METER LOOP MUST BE INSTALLED FOR STAKING ENGINEER TO STAKE!

GENERAL REQUIREMENTS:

1. Member is responsible for installing and maintaining all equipment except the meter, in accordance with the National Electrical Code.
2. Member is responsible for load capacity including future loads.
3. This drawing is illustrative of generally acceptable standards. It shall be the responsibility of the member to construct and maintain the electrical service in a safe manner. Before any connection can be made, PCEMC's field service personnel will evaluate the installation for readiness. If required by local code, the installation must first be inspected, approved and tagged by the local governing authority. In any event, PCEMC reserves the right not to make the connection if PCEMC does not consider the installation to be in accordance with these Specifications.
4. Use qualified electrician and install the electric service in accordance with the National Electrical Code.
5. Meter pan height shall be 5'–6" above ground.
6. A nylon pull cord shall be provided in the PVC conduit. Tape end of pull cord to the end of PVC conduit at pole. Nylon cord must be exposed.
7. Member must also furnish (3) three 10–foot sections of Schedule 80 PVC conduit and (1) one weatherhead (to be installed by Co–op).
8. LOUISIANA ONE CALL (800) 272–3020 should be called prior to digging.
9. House must be at least 10' away from primary line.

Legend:

A) Not used.

B) Member's conductors, copper only.

C1) Grounding conductor, copper only, bare in wall or if exposed in 1/2" conduit, securely fastened to wall.

C2) Ground rod clamps: Acorn type below grade.

C3) Ground rod 8' long, 1/2" dia. copperweld or 5/8" dia. galv. installed flush with or below grade.

D) Conduit straps.

E) Not used.

F) Schedule 80 PVC conduit above ground and Schedule 40 PVC below ground. Contact Pointe Coupee for proper size.

G) The service disconnecting means shall be located at a readily accessible location either outside the building or structure or inside nearest the point of entrance of the service conductors.

H) 90° Sweep, 36" minimum radius elbow installed 6" from Co–op pole.

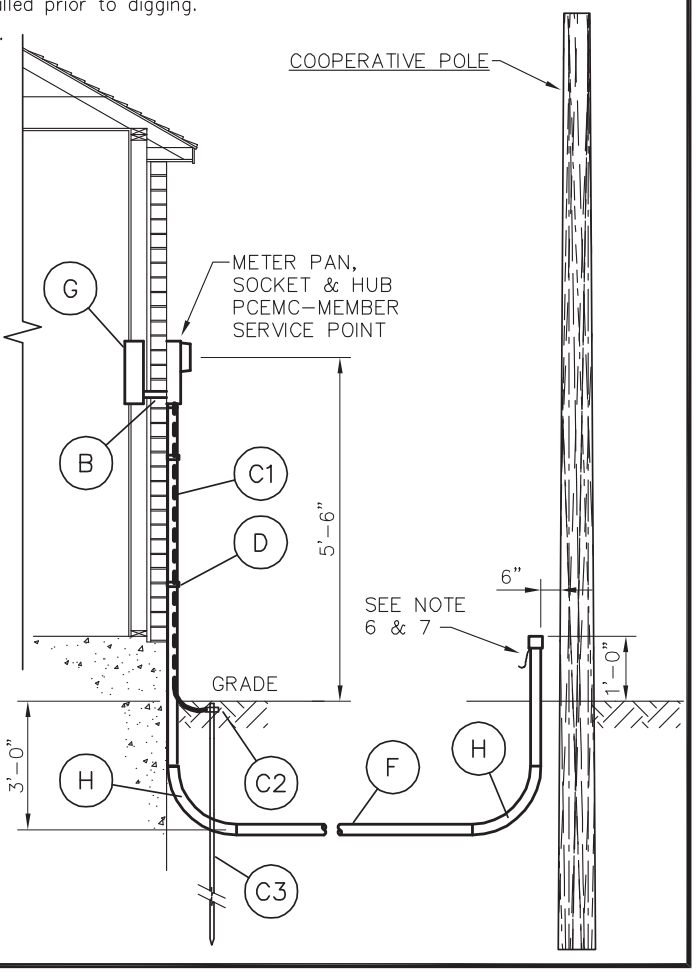

BHA: PCESERV3_CUSTOMER.DWG DSF=32 11/09/17 @ 03:37PM BY #109

Meter Loop Specifications

Rev 4: November 9, 2017

PC ELECTRIC

SINGLE PHASE – 120/240V – 200 AMPS OR LESS
METER LOOP SPECIFICATIONS
THRU–ROOF (ROOF JACK) SERVICE ENTRANCE

METER LOOP MUST BE INSTALLED FOR STAKING ENGINEER TO STAKE!

GENERAL REQUIREMENTS:

1. Member is responsible for installing and maintaining all equipment beyond the point of service, except the meter, in accordance with the National Electrical Code.
2. Member is responsible for load capacity including future loads.
3. This drawing is illustrative of generally acceptable standards. It shall be the responsibility of the member to construct and maintain the electrical service in a safe manner. Before any connection can be made, PCEMC's field service personnel will evaluate the installation for readiness. If required by local code, the installation must first be inspected, approved and tagged by the local governing authority. In any event, PCEMC reserves the right not to make the connection if PCEMC does not consider the installation to be in accordance with these Specifications.
4. Use qualified electrician and install the electrical service in accordance with the National Electrical Code.
5. Meter pan height shall be 5'–6" above ground.
6. House must be at least 10' away from primary line.

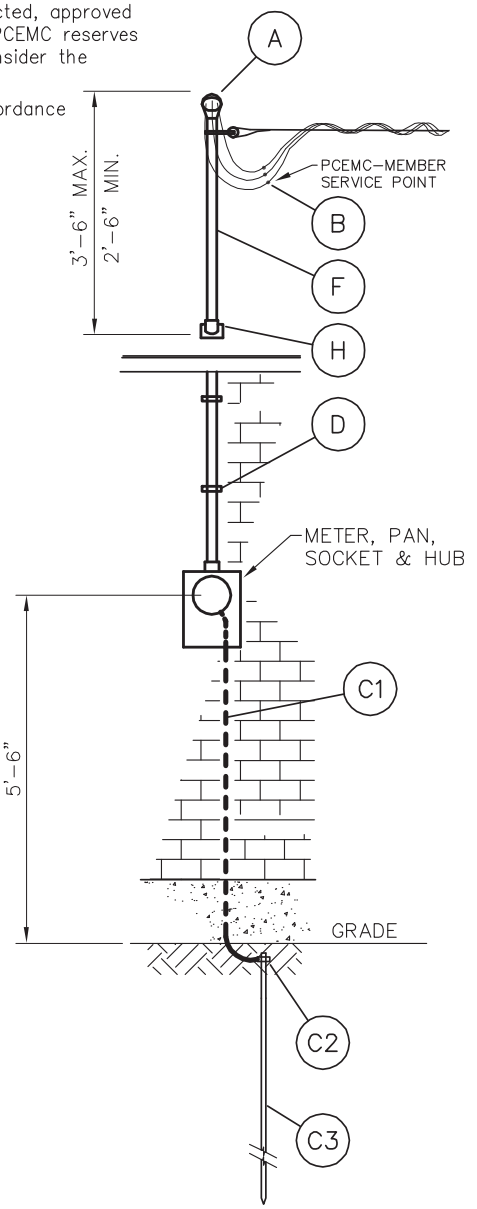

Legend:

A) Weatherhead.

B) Service entrance conductors, copper only.

C1) Grounding conductor, copper only, bare in wall or if exposed in 1/2" conduit securely fastened to wall.

C2) Ground rod clamps: Acorn type below grade.

C3) Ground rod 8' long, 1/2" dia. copperweld or 5/8" dia. galv. installed flush with or below grade.

D) Conduit straps: Min. 2, galv.

E) Not used.

F) Galvanized conduit and fittings only.

G) The service disconnecting means shall be located at a readily accessible location either outside the building or structure or inside nearest the point of entrance of the service conductors.

H) Install roof jack conduit not further than 4' from the edge of the roof.

BHA: PCESERV4_CUSTOMER.DWG DSF=32 11/09/17 @ 03:39PM BY #109

Meter Loop Specifications

Rev 4: November 9, 2017

PC ELECTRIC

SINGLE PHASE – 120/240V – 200 AMPS OR LESS
METER LOOP SPECIFICATIONS
WALL MOUNTED SERVICE ENTRANCE

METER LOOP MUST BE INSTALLED FOR STAKING ENGINEER TO STAKE!

GENERAL REQUIREMENTS:

1. Member is responsible for installing and maintaining all equipment beyond the point of service, except the meter, in accordance with the National Electrical Code.
2. Member is responsible for load capacity including future loads.
3. This drawing is illustrative of generally acceptable standards. It shall be the responsibility of the member to construct and maintain the electrical service in a safe manner. Before any connection can be made, PCEMC's field service personnel will evaluate the installation for readiness. If required by local code, the installation must first be inspected, approved and tagged by the local governing authority. In any event, PCEMC reserves the right not to make the connection if PCEMC does not consider the installation to be in accordance with these Specifications.
4. Use qualified electrician and install the electrical service in accordance with the National Electrical Code.
5. Meter pan height shall be 5'–6" above ground.
6. House must be at least 10' away from primary line.

Legend:

A) Weatherhead.

B) Service entrance conductors, copper only.

C1) Grounding conductor, copper only, bare, in wall or if exposed in 1/2" conduit, securely fastened to wall.

C2) Ground rod clamps: Acorn type below grade.

C3) Ground rod 8' long, 1/2" dia. copperweld or 5/8" dia. galv. installed flush with or below grade.

D) Conduit straps: Min. 3, galv.

E) Not used.

F) Galvanized conduit and fittings only.

G) The service disconnecting means shall be located at a readily accessible location either outside the building or structure or inside nearest the point of entrance of the service conductors.

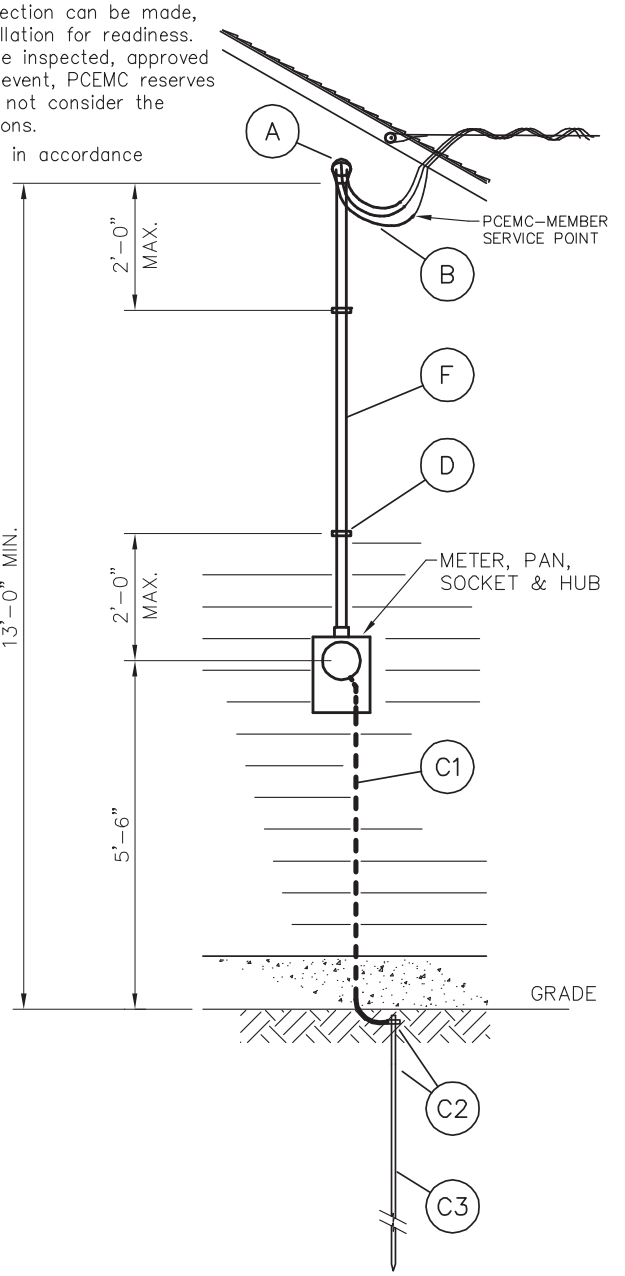

BHA: PCESERV5_CUSTOMER.DWG DSF=32 11/09/17 @ 03:41PM BY #109

Meter Loop Specifications

Rev 4: November 9, 2017

PC ELECTRIC

SINGLE PHASE – 120/240V – 200 AMPS OR LESS
METER LOOP SPECIFICATIONS
TEMPORARY OVERHEAD SERVICE

METER LOOP MUST BE INSTALLED FOR STAKING ENGINEER TO STAKE!

GENERAL REQUIREMENTS:

1. Member is responsible for installing and maintaining all equipment beyond the point of service, except the meter, in accordance with the National Electrical Code.
2. Member is responsible for load capacity including future loads.
3. This drawing is illustrative of generally acceptable standards. It shall be the responsibility of the member to construct and maintain the electrical service in a safe manner. Before any connection can be made, PCEMC's field service personnel will evaluate the installation for readiness. If required by local code, the installation must first be inspected, approved and tagged by the local governing authority. In any event, PCEMC reserves the right not to make the connection if PCEMC does not consider the installation to be in accordance with these Specifications.
4. Use qualified electrician and install the electrical service in accordance with the National Electrical Code.
5. Meter pan height shall be 5'–6" above ground.
6. LOUISIANA ONE CALL (800) 272–3020 should be called prior to digging.
7. Temporary meter pole must be at least 10' away from primary line.

Legend:

A) Weatherhead.

B) Service entrance conductors, copper only.

C1) Pole grounding conductor, copper only, bare.

C2) Ground rod clamps: Acorn type below grade.

C3) Ground rod 8' long, 1/2" dia. copperweld or 5/8" dia. galv. installed flush with or below grade.

D) Conduit straps: Min. 3, galv.

E) Pole: 4"x4"x16', pressure treated creosote, penta or CCA process only.

F) Galvanized conduit and fittings only

G) Service main disconnect: Circuit breaker recommended, fused switch acceptable, raintype enclosure.

H) Staples, copper, copperweld or equivalent, 6" apart.

J) Weatherproof receptacle, GFCI type.

K) Brace: 2"x4"x16' braced in the direction of new service.

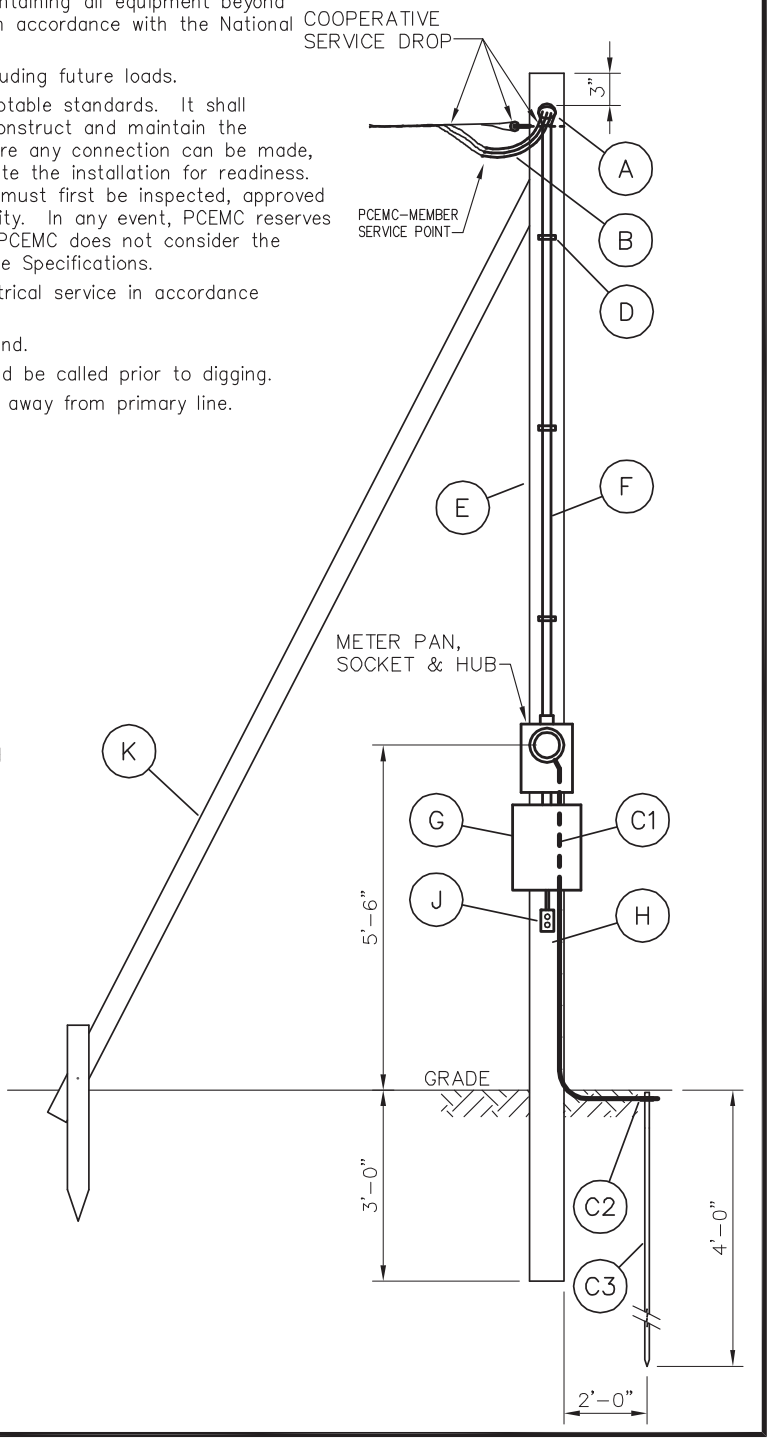

BHA: PCESERV6_CUSTOMER.DWG DSF=32 11/09/17 @ 03:43PM BY #109

Meter Loop Specifications

Rev 2: November 10, 2017

PC ELECTRIC

METER LOOP SPECIFICATION
ALTERNATIVE SOURCE OVERHEAD SERVICE

METER LOOP MUST BE INSTALLED FOR STAKING ENGINEER TO STAKE

GENERAL REQUIREMENTS:

1) Consumer is responsible for all equipment beyond the point of service except the meter
2) Consumer is responsible for load capacity including future loads.
3) This drawing is illustrative of generally acceptable standards. Where National, Local, City or Community codes are more restrictive, they shall govern. It shall be the responsibility of the member to construct and maintain the electrical service in a safe manner.
4) Use qualified electrician and install the electrical service in accordance with the National Electric Code.
5) Meter pan height shall be 5'-6" above ground.

Legend:

A) Member's Alternative Source.

B) Member's conductors, copper only.

C1) Grounding conductor, copper only, in wall or, if exposed, securely fastened to wall.

C2) Ground rod clamps: Acorn type below grade recommended, clamp type above grade.

C3) Ground rod 8' long, 1/2" dia. copperweld or 5/8" dia. galv.

D) Conduit straps as required.

E) Exterior Weatherproof Alternative Source Disconnect must: 1) be sized according to the largest source protective device, 2) equiped with externally operated manual disconnect, that is lockable in the open position, 3) accessible to PCEMC personal, and 4) be labeled

F) PVC Sch. 80 or rigid galvanized conduit, smooth bushing or bell on end of conduit.

G) Service main disconnect: Circuit breaker recommended, fused switch acceptable, may be inside or raintight outside the building but not more than 30" from meter.

H) Member's conductors, sized according to Disconnect (E).

I) Weatherhead.

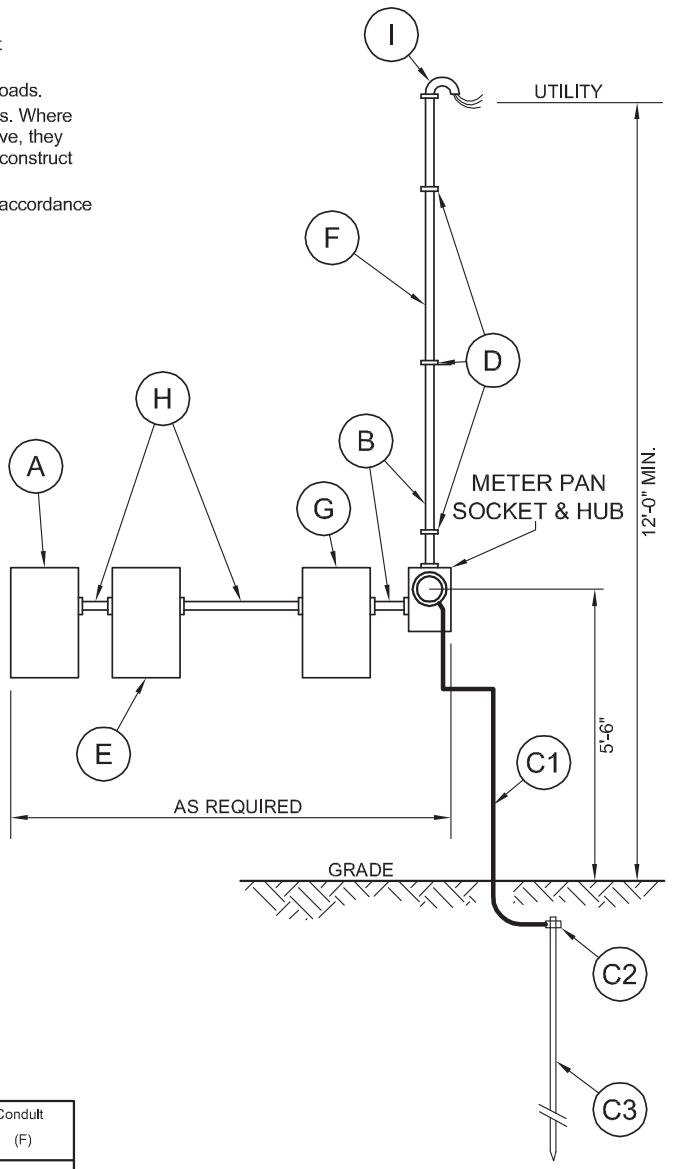

(G) Full Capacity Amperes	(B) Conductor sizes, Insulation Type, 30°C ambient, THHN-Copper			Ground Wire (C1)	Conduit (F)
	Phase	Neutral			
100	2	2		6	2"
150	1/0	1		6	2"
200	2/0	1/0		6	2"

ALTERNATE SOURCE OVERHEAD SERVICE
METER LOOP SPECIFICATION

PC ELECTRIC

BHA, INC.
BATON ROUGE, LOUISIANA

SCALE :	DATE :	PROJECT NO. :	
N.T.S	07/23/15	466E15B	
DRAWN :	APPROVED :	DRAWING NO. :	REV. :
JEJ	WBS		2

BHA: ALTERNATE SOURCE OVERHEAD SERVICE.dwg DSF=1 11/10/17 @ 10:09AM BY #109

Meter Loop Specifications

PC ELECTRIC

Rev 2: November 10, 2017

METER LOOP SPECIFICATION
ALTERNATIVE SOURCE UNDERGROUND SERVICE

METER LOOP MUST BE INSTALLED FOR STAKING ENGINEER TO STAKE

GENERAL REQUIREMENTS:

1) Consumer is responsible for all equipment beyond the point of service except the meter
2) Consumer is responsible for load capacity including future loads.
3) This drawing is illustrative of generally acceptable standards. Where National, Local, City or Community codes are more restrictive, they shall govern. It shall be the responsibility of the member to construct and maintain the electrical service in a safe manner.
4) Use qualified electrician and install the electrical service in accordance with the National Electric Code.
5) Meter pan height shall be 5'-6" above ground.

Legend:

A) Member's Alternative Source.

B) Member's conductors, copper only.

C1) Grounding conductor, copper only, in wall or, if exposed, securely fastened to wall.

C2) Ground rod clamps: Acorn type below grade recommended, clamp type above grade.

C3) Ground rod 8' long, 1/2" dia. copperweld or 5/8" dia. galv.

D) Conduit straps as required.

E) Exterior Weatherproof Alternative Source Disconnect must: 1) be sized according to the largest source protective device, 2) equiped with externally operated manual disconnect, that is lockable in the open position, 3) accessible to PCEMC personal, and 4) be labeled

F) PVC Sch. 80 or rigid galvanized conduit, smooth bushing or bell on end of conduit.

G) Service main disconnect: Circuit breaker recommended, fused switch acceptable, may be inside or raintight outside the building but not more than 30" from meter.

H) Member's conductors, sized according to Source (A).

I) 24"min. radius Sweep elbow

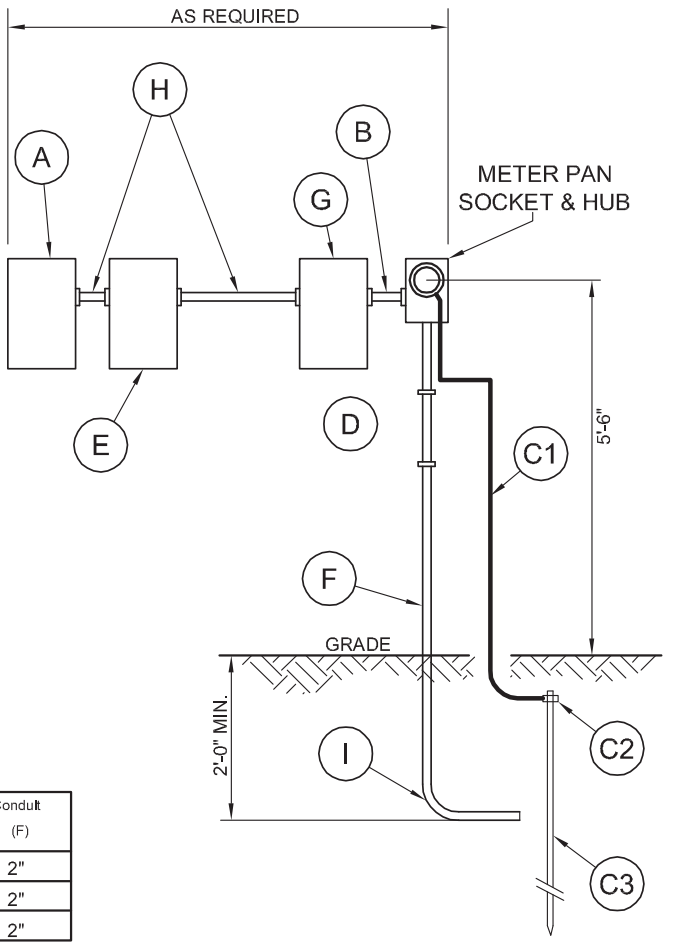

(G) Full Capacity Amperes	(B) Conductor sizes, Insulation Type, 30°C ambient, THHN-Copper			Ground Wire (C1)	Conduit (F)
	Phase	Neutral			
100	2	2		6	2"
150	1/0	1		6	2"
200	2/0	1/0		6	2"

ALTERNATE SOURCE UNDERGROUND SERVICE
METER LOOP SPECIFICATION

PC ELECTRIC

BHA, INC.
BATON ROUGE, LOUISIANA

SCALE :	DATE :	PROJECT NO. :	
N.T.S	07/23/15	466E15B	
DRAWN :	APPROVED :	DRAWING NO. :	REV. :
JEJ	WBS		2

BHA: ALTERNATE SOURCE UNDERGROUND SERVICE.dwg DSF=1 11/10/17 @ 10:14AM BY #109

Meter Loop Specifications

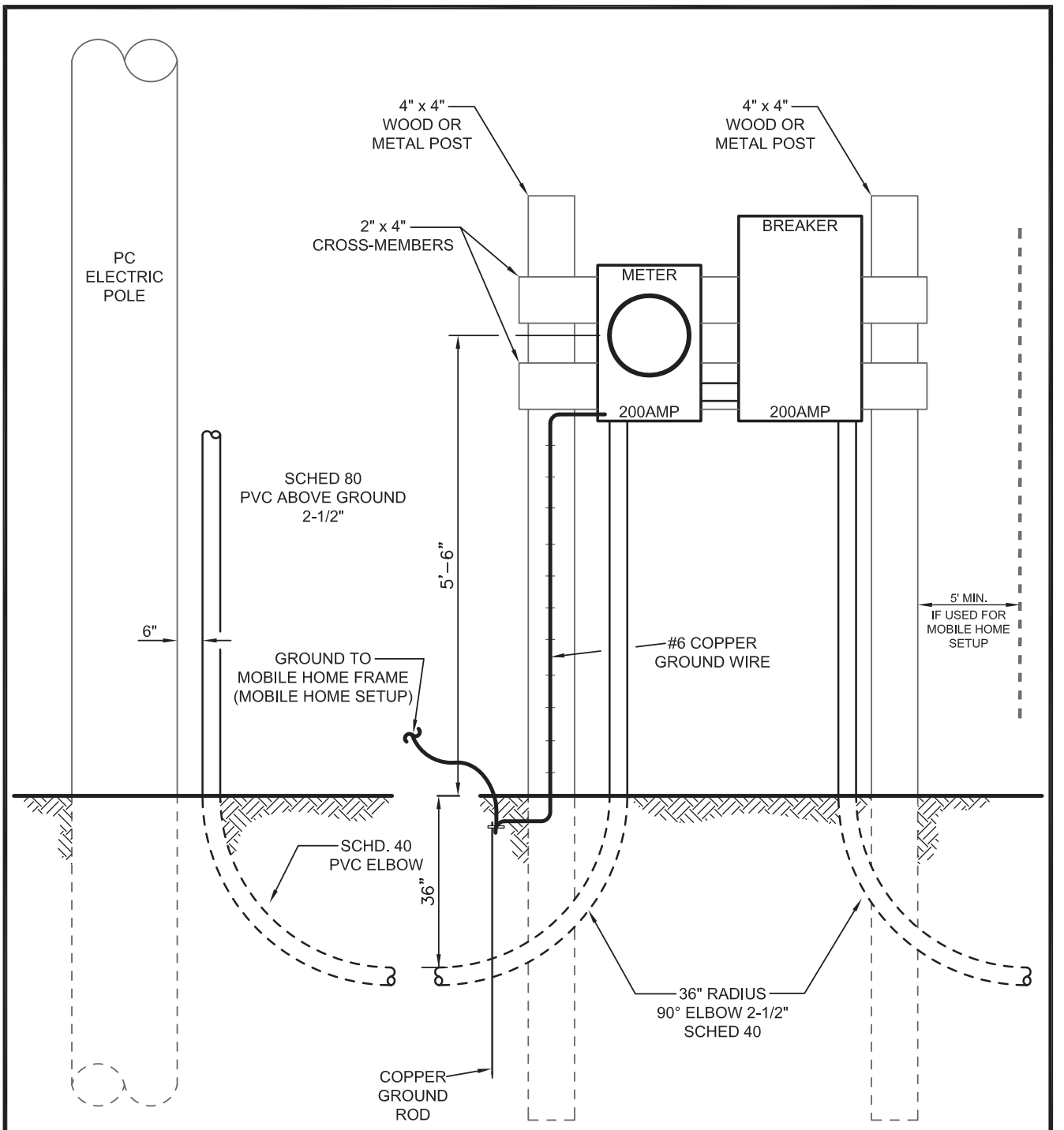

UNDERGROUND SERVICE
ENTRANCE DETAIL

120/240V 200AMPS OR LESS
SINGLE PHASE

PC Electric

SCALE :	DATE :	PROJECT NO. :	
N.T.S.	05/30/2018	466 GENERAL	
DRAWN :	APPROVED :	DRAWING NO. :	REV. :
JEJ	WBS	1 OF 1	2

BHA: Meter and Breaker.dwg DSF=1 07/03/18 @ 03:47PM BY #109

For Your Safety

Electric wires carry electricity, a product that powers, heats, cools and lights your home or place of work. Electricity can burn, injure or kill.

Electricity is constantly striving to find a path to the ground. Electric wires should always be avoided. Coming near or into contact with an electric wire with either your body or another object provides a hazardous path to the ground for electricity.

Be Aware, Avoid the Dangers and Live!

Knowing how to respect the power of electricity can save your life. If any of PC Electric's equipment, transformers or substations are damaged or vandalized, contact us immediately at 1-800-738-7232. The following are some of the most common potential hazards to look out for:

Stay away from Substations and Transformers

These enclosures should be locked and inaccessible to the public at all times. Warning signs are placed on the outsides of these structures indicating the potential for death or serious injury. On the inside of these same structures, danger signs are warning of imminent death or serious injury. If you see any locks or fences that are compromised in any way, contact PC Electric.

Do Not Damage Electric Equipment

Damaging cooperative equipment (e.g. insulators, transformers, signs, fences, etc.) increases the potential for hazards or power outages. This includes accidental and/or intentional destruction.

Stay Away from Fallen Overhead Power Lines

No power line should ever be considered dead or de-energized. There is always the hazard of lines becoming energized from other sources. (For example: back feed from generators). Due to electricity's unpredictability, it is not necessary for someone to actually touch or come in contact with an electric wire to be shocked or electrocuted.

Keep Away from Power Lines

This includes working, playing, digging, constructing or operating equipment near overhead or underground power lines. Ladders should never be used near electric power lines. Nor should any attachments be made to utility poles (e.g. satellite dishes, deer stands, basketball goals, etc.). Louisiana law requires a minimum 10 foot clearance from our electric lines for all the above activities. PC Electric must by law be notified of any activities prior to taking place within 10 feet of an electric line.

For Your Safety

Stay Away from PC Electric Job Sites

Job sites are set up for the safety of our employees. Our employees have to remain alert and concentrate on their duties at hand for their safety as well as your safety. If you have questions, please call our office and speak to a representative that can answer your questions.

Water and Electricity Don't Mix

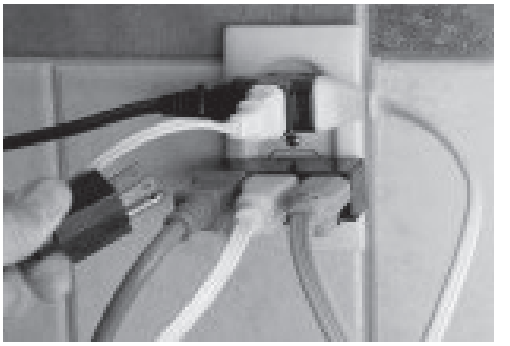

Water conducts electricity. Electric devices should not be used near water or with wet hands. As added precaution, Ground Fault Circuit Interrupter (GFCI) outlets should be used in appropriate locations (e.g. bathrooms, kitchens, etc). Use only a fire extinguisher to put out an electrical fire.

Use Caution when Using Electrical Cords

Stay away from broken installation on electrical cords. Do not overload extension cords or electrical outlets. Too many plugs are a fire danger.

Unplug Electric Devices before Cleaning

Unplug appliances and electronic devices before cleaning or removing items that might be stuck inside.

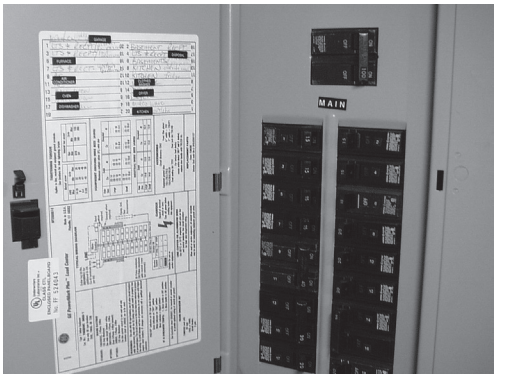

If an Accident Happens

Knowing how to safely turn the power off at home or work could save someone's life. Never touch a person or equipment while in contact with an electric wire. Call 911!

If your vehicle comes in contact with an electric line, it is safer to remain inside the vehicle. Do not get out! Touching the vehicle while trying to get in or out can give electricity a hazardous path to the ground. In the event that the vehicle is on fire, passengers should jump clear of the vehicle without touching both the vehicle and ground at the same time. Then keeping both feet together, passengers should shuffle away to a safe distance.

Generator Safety

The improper use of a generator can cause a hazardous situation for you, your neighbors and the people who are restoring your power. Hazardous situations can be defined as not only causing a fire or damaging appliances but also back feeding electricity onto the power lines that are assumed to be de-energized.

To avoid back-feeding of electricity into utility systems, you must have a qualified, licensed electrician install a double-pole, double-throw transfer switch between the generator and utility power in compliance with all state and local electrical codes.

Energy Theft is a Crime!

Energy theft is a crime punishable by law. Meter tampering and energy theft is a crime that can result in property damage, electric shock, fire, explosions or even death. PC Electric also recognizes that theft is a contributing factor to higher utility rates. The Cooperative is committed to combating this problem using every available means and to recovering lost revenues when a theft is detected. PC Electric employees are trained to detect meter tampering and energy theft, but you can help also. If you suspect meter tampering or energy theft, first stay away from that area for your safety and then contact us at 1-800-738-7232.

Building, Renovating or Landscaping

Call Before You Dig

Louisiana One Call is a free service to help you dig safely. They will alert PC Electric so that we can mark nearby underground facilities before you start digging. When planning to landscape, make an addition to an existing building or building a new structure, we require a 10 foot clearance from all electrical equipment and power lines.

Call Louisiana One (Dial 811), Wait for the Marks, Respect the Marks, Look Above, and Dig with Care!

Building and Renovating

All construction must be located no less than 10 feet away from the overhead power lines, underground power lines and electrical transformers/equipment. This includes the placement of any pre-fabricated or movable structures, vehicles, trailers or equipment.

If you are building an addition, do not enclose a meter loop within the new structure. Electric meter loops must be accessible for the purpose of installation, operation, meter reading, maintenance, or removal of utility property. These specifications can be found Under the Meter Loop Specification Section of this Member Handbook. These specifications are required for the safety of individuals and property.

Landscaping

Before all digging and planting, call Louisiana One Call (Dial 811), wait for the marks, respect the marks, look above for power lines and dig with care. It is required that nothing is planted within a 10 foot radius of the overhead power lines, underground power lines and electrical transformers/equipment.

CAUTION CAUTION CAUTION CAUTION CAUTION CAUTION CAU

Always call before you dig, look above for power lines, and keep a 10 foot vertical and horizontal clearance from all electrical equipment when building, renovating and landscaping.

Building, Renovation or Landscaping

Alternative Source Generating Facilities

The generating facility must comply with all PC Electric's requirements. Generating sites can be residential or commercial that are fueled by solar, wind, hydroelectric, geothermal, biomass, fuel cell, or micro turbines that are fueled by renewable resources.

A member seeking to interconnect an Alternative Source Generation Facility to the cooperative's system must submit all applicable forms provided by PC Electric to the cooperative's designated personnel for review. Member-owned generator equipment and installations must be installed in accordance with the manufacturer's specifications as well as all applicable provisions of the National Electrical Code, PC Electric, as well as state and local codes.

Emergency Contact Information	
PC Electric	**1-800-738-7232**
Iberville Parish Office of Emergency Preparedness	**(225) 687-5140**
Pointe Coupee Parish Ofc. of Emerg. Preparedness	**(225) 694-3737**
WBR Parish Office of Emergency Preparedness	**(225) 346-1577**
Iberville Parish Sheriff	**(225) 687-5100**
Pointe Coupee Parish Sheriff	**(225) 638-5400**
West Baton Rouge Parish Sheriff	**(225) 343-9234**

Member Services

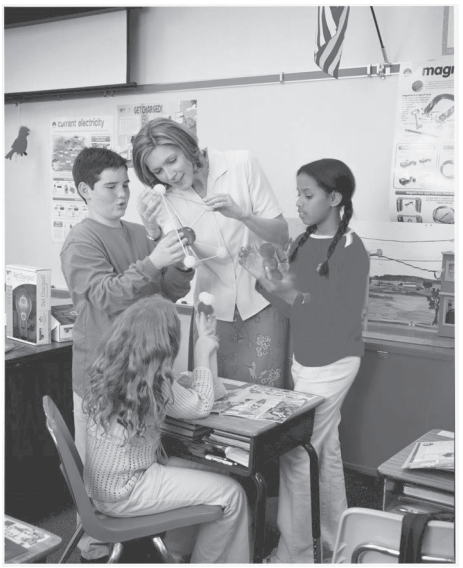

Adopt-A-School (Applications mailed out early September.)

Mini grants are awarded to our adopted schools within Pointe Coupee, Iberville, and West Baton Rouge parishes. These grants assist the schools in purchasing the needed academic materials and equipment which aide in the education of our children. We are proud to adopt the following schools: Valverda Elementary, Upper Pointe Coupee Elementary, Rosenwald Elementary, Rougon Elementary, Livonia High, Catholic of Pointe Coupee, False River Academy, Pointe Coupee Adult Education, Port Allen High, Holy Family, Devall Middle, Chamberlin Elementary, Plaquemine High, Crescent Elementary, St. John of Plaquemine and The Math, Science and Arts (MSA) Academy. *(Deadline to return applications first Friday in October.)*

Art Contest (Contest forms mailed out mid February.)

The children of PC Electric members as well as children who attend one of PC Electric's adopted schools are invited to participate in the cooperative's annual art contest. The art is required to have an electrical theme and the words "Thank You" must be included somewhere within the drawing. All art entries become the property of PC Electric, and the winning art will be displayed throughout our office buildings. First place winners receive a $35 gift card, a plaque and a certificate. Second place winners receive a plaque and a certificate while all third place winners receive a ribbon and a certificate. ***(Deadline to return art last business day in March.)***

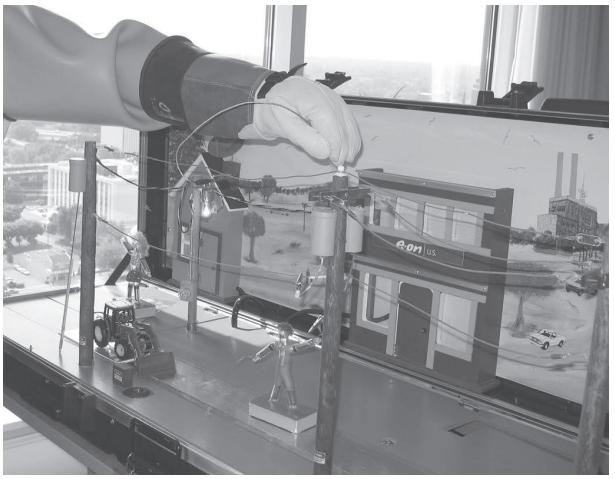

Electrical Safety Program - Grades 4 & 6
(Scheduling begins in early August and goes through out the school year.)

Trained employees from our safety and line crew departments conduct an electrical safety presentation to students in our adopted schools and in the local libraries within our tri-parish service area. These complimentary presentations last between 45-60 minutes and consist of a video, class discussion, live wire demonstration and a questions and answers session. Contact Safety Coordinator Joe Langlois to schedule your class presentation.

Energy Savings Program - Grades 3 & 4 (Scheduling begins in early August and goes throughout the school year.)

Employees from our Member Services Department conduct an energy savings presentation to students in our adopted schools and in the local libraries within our tri-parish service area. These complimentary presentations last between 30-40 minutes and consist of a power point presentation and a questions and answers session about energy and energy savings. Contact Jill Copeland in our Member Services Department to schedule your presentation.

Member Services

Math and Science Awards (Award applications mailed out early April.)

In our industry, it is important to encourage our youth to pursue careers in the Math and Science fields. Electricity is an ever changing technology because of its many uses. PC Electric presents approximately 30 Math and Science Awards to students in our adopted schools throughout our tri-parish service area. The awards are available to elementary, junior high and high school students in schools throughout Iberville, Pointe Coupee and West Baton Rouge parishes.

The Math and Science Awards are given to the students who have the highest combined Math and Science grade in each of the 3 different school levels: graduation from elementary school (3rd grade, 5th grade or 6th grade depending on the school and parish); graduation from middle school or junior high (8th grade); and graduation from high school (12th grade).

The elementary students that receive the awards are presented with a framed certificate and a $25 gift card. The junior high students are presented with a framed certificate and a $50 gift card. The high schools students are presented with a framed certificate and a $75 gift card. *(Deadline to return applications last Friday of April.)*

Scholarships (Applications and guidelines mailed late October.)

One of our core principles is education. We believe it is important that our members' children continue their education and pursue their dreams after high school. Each year we award certificates and scholarships to three graduating high school seniors, one from each of the parishes we serve; Iberville, Pointe Coupee and West Baton Rouge parishes. The three $1,000 scholarships will assist the students in their continuing education at any accredited college, university, business or vocational school of their choice. A student's parent(s) must be a member of PC Electric or have a parent who is a manager or owner of a company that is a member of PC Electric. Please see the website for additional guidelines and criteria. Winners will be selected at our annual meeting held on the last Wednesday in January of each year. *(Deadline to return application first Friday of December.)*

Member Services

4-H Endowment Program (Endowments presented at our Annual Meeting in January.)

4-H is the nation's largest youth development and empowerment organization, reaching more than 7 million 4-H youth in urban neighborhoods, suburban schoolyards and rural farming communities. 4-H'ers engage in hands-on learning activities in the areas of science, healthy living, and food security. Because we serve primarily rural areas, it is appropriate that we would support such a program. Each year PC Electric provides a grant to the local 4-H programs within our tri-parish service area.

Energy Efficiency Presentations for Adults

Employees from our member services department conduct energy efficiency presentation to groups of 10 or more within our tri-parish service area. These complimentary interactive presentations last between 45-60 minutes and consist of a power point presentation and a questions and answers session about energy and energy efficiency. Contact Jill Copeland in our Member Services Department to schedule your presentation.

Economic Development

We actively work with federal, state and local governing agencies, chambers of commerce, tourists commissions and other development organizations to promote community, economic and industrial development. We want business to locate in our area to foster community growth, but as your electric utility provider, we also want your businesses to thrive and be prosperous. It is our mission to help make your expansions, relocations and new investments a welcomed part of our community.

Cooperative Action Network

PC Electric is always working with local, state and federal elected officials. It is our responsibility to fight for your best interest in providing you with clean, but affordable electricity. However, our voice is always stronger in numbers and that is why we encourage you to stay abreast of current events and voice your cares and concerns with your elected officials. You can count on us to keep you informed about pertinent information concerning your utility needs. Visit www.action.coop.

COOPERATIVE ACTION NETWORK

Member Services

PC Electric Connections

PC Electric Connections is the official communication publication of the cooperative. This informative magazine is sent to all of our members complimentary. It is your source of information and a great way for you to keep track of what is happening and pertinent to our service territory. Look for your account numbers within pages of the magazine. If your account number is published in the text, call us within the months that is printed on the cover of the magazine and you will receive a $25 credit towards your next electric bill.

Member Services

Where Does My Money Go?

Annual energy bill for a typical single family home is $2060.

Appliances include refrigerators, dishwashers, clothes washer and dryer.

Electronics include telephone and external power adapters, consumer electronics (computer, TVs and DVD players), home office equipment and small appliances.

For more ways to save money, visit our website at www.pcemc.org.

Twelve Quick Tips for Energy Savings:

1: Perform regular maintenance on your heating & cooling unit & have it serviced by a licensed professional annually.

2: Set your thermostat to 78° in the summer & 68° in the winter.

3: Change filters on your heating & cooling unit every one to three months.

4: If using window units & space heaters, only heat or cool rooms being used & close off rooms not being used.

5: Water heaters should be set at 110-120°.

6: Insulate water heater pipes if the unit is exposed to the elements.

7: Have your water heater checked by a licensed professional annually.

8: When shopping for new appliances, look for the Energy Efficiency Ratio (EER); the higher the number the more energy efficient the appliance.

9: Clean lint & dust build up from the coils behind your appliances at least once a year.

10: Make sure refrigerator & freezer seals fit tightly when doors close.

11: Replace incandescent bulbs with energy saving CFL or LED bulbs.

12: Turn off lights when leaving a room.

Power Outages

What to do When the Lights Go Out?

When severe weather causes power outages, employees of PC Electric begin working immediately to restore service as quickly as possible. Primary lines serving hundreds of customers are serviced first, and then the secondary lines serving just a few customers are serviced. Medical facilities and individuals on life-support systems are given top priority.

When your lights go out, look outside and see if your neighbors are also in the dark. If they are not, check your fuse box or circuit breaker to see if you can locate the problem.

If the PC Electric system is believed to be the cause of the outage, call PC Electric at 1-800-738-7232. You can also report your outage online at www.pcemc.org. Outages that occur in severe weather or that last for an extended period of time, can place a heavy burden on the system at the moment power is restored. To prevent an overload on the system and possibly another outage, take these steps:

- Turn off every inside light except one.
- Turn down your thermostat.
- In cold weather, close windows and drapes to save heat. Pick one room on the warm side of the house (preferably one with a fireplace). Close the door to the rest of the house and use blankets to insulate your windows.
- If the outage lasts over 60 minutes, turn off your electric water heater.
- Make sure your kitchen range is off, both the surface and the oven. Never use it for heat.
- Turn off all unnecessary appliances.
- Avoid opening the refrigerator door as much as possible. If the power is out for less than 4 hours, then the food in your refrigerator will be safe to consume. If the power is out for longer than 4 hours, pack milk and other dairy products , meat, fish, eggs, and spoilable leftovers into a cooler or ice chest surrounded by ice.
- Avoid opening the freezer door. A full, freestanding freezer will keep food at freezing temperatures about 2 days; a half-full freezer about 1 day. For more information about food safety during and after a power outage, call the USDA Food Safety Hotline at 1-800-535-4555 or go to www.foodsafety.gov.

If you see a downed power line, STAY AWAY!! And call us at once!

Leave your porch light on so PC Electric workers will know when your power has been restored. When power comes back on, slowly switch your appliances and lights back on and gradually return your thermostat to its normal setting.

Tune In To:	
The Advertiser, Lafayette	The Advocate, Baton Rouge
KCLF (1500 AM)	Pointe Coupee Banner, PC
Post South, Iberville	Riverside Reader
WAFB (CBS)	WBRZ (ABC)
Westside Journal, WBR	WJBO (1150 AM)
WVLA (NBC)	

Power Outages

Powering Up After an Outage

When the power goes out, we expect it to be restored within a few hours. But when a major storm or natural disaster causes widespread damage, extended outages may result. Our line crews work long, hard hours to restore service safely to the greatest number of consumers in the shortest time possible. Here's what's going on if you find yourself in the dark:

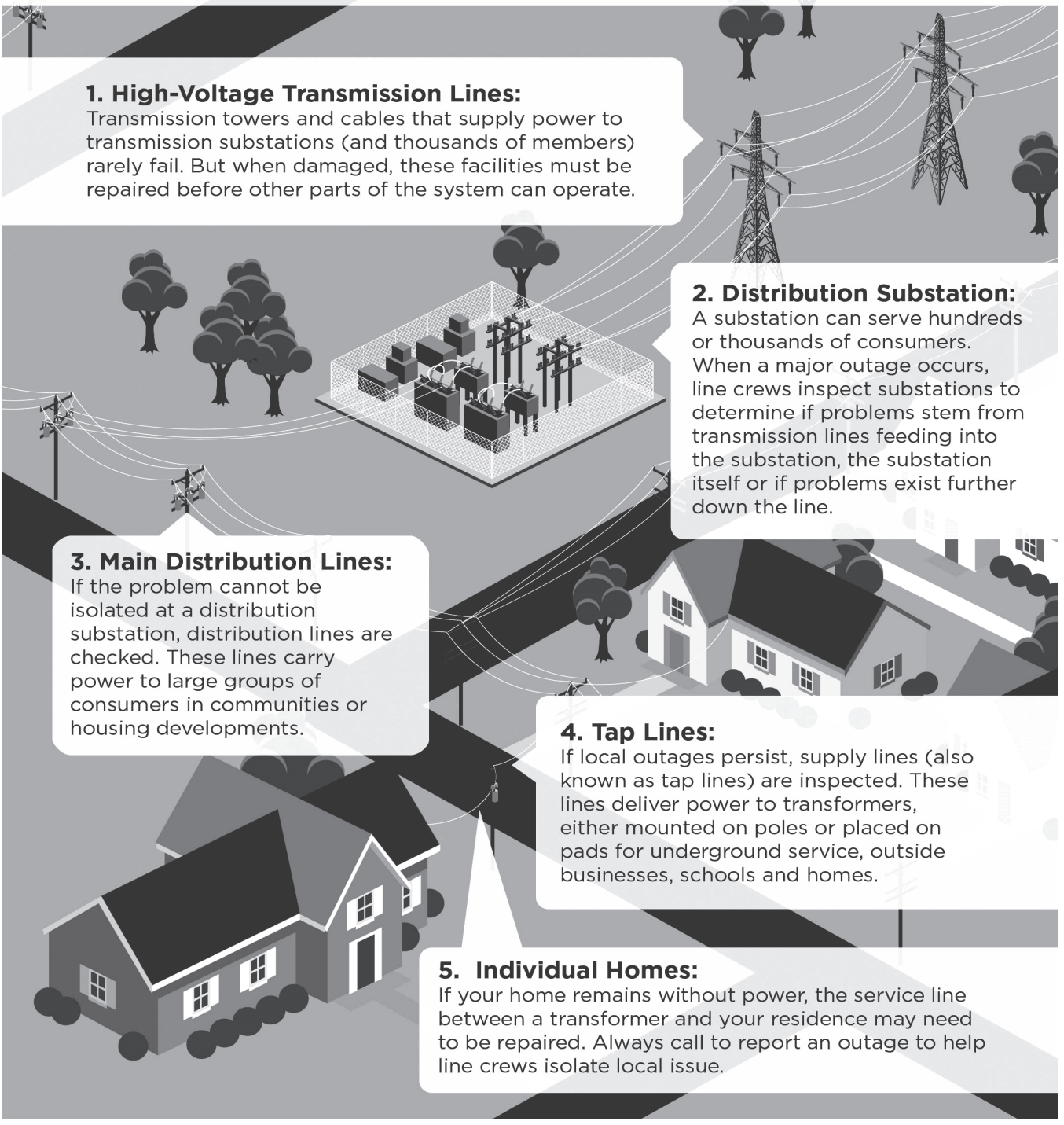

1. High-Voltage Transmission Lines:
Transmission towers and cables that supply power to transmission substations (and thousands of members) rarely fail. But when damaged, these facilities must be repaired before other parts of the system can operate.

2. Distribution Substation:
A substation can serve hundreds or thousands of consumers. When a major outage occurs, line crews inspect substations to determine if problems stem from transmission lines feeding into the substation, the substation itself or if problems exist further down the line.

3. Main Distribution Lines:
If the problem cannot be isolated at a distribution substation, distribution lines are checked. These lines carry power to large groups of consumers in communities or housing developments.

4. Tap Lines:
If local outages persist, supply lines (also known as tap lines) are inspected. These lines deliver power to transformers, either mounted on poles or placed on pads for underground service, outside businesses, schools and homes.

5. Individual Homes:
If your home remains without power, the service line between a transformer and your residence may need to be repaired. Always call to report an outage to help line crews isolate local issue.

Substation Locations and Areas Served by Those Substations

Simmesport
Lettsworth, LA Highway 1--Innis to Simmesport, Simmesport to Locks, LA Highway 418, Legonier, LA Highway 15, LA Highway 417 to Coon, LA Highway 971

Quinton
LaCour, Batchelor, LA Highway 1--Batchelor to Innis, Old River, Innis, Coon, Bayou Latanache, LA Highway 418, New California, State Lane, Angola Ferry, Hopkins Landing, Normandy Lane, Old River Campsites

Morganza
Spillway, LA Highway 10 towards Fordoche, Labarre to Morganza, Deaton Lane, Brownview, Callegan Lane

New Roads
LA Highway 1--North of New Roads to Labarre, Mandela, Delta, False River Regional Airport, Fairfield, Hospital Road, Romalis Drive to Woodman Lane, LA Highway 10--North of New Roads, New LA 10 to John James Audubon Bridge.

Highway 415
Dabadie Subdivision, River Bend Subdivision, Waterloo Subdivision, Levee Road/LA Highway 415, Big Cajun and Russel Lane, Lance Lemoine

Erwinville
LA-Highway 415--along the levee, LA Highway 985--Rose Hill, LA Highway 982, Section Road, Flynn Road, Elm Grove, Pecan Grove, Rougon Road, Hidden Oaks, McLin Road, Bueche Road, Burnside Road, 40 Acres, Dickinson and Lorio Dairy Roads, Treuil Road, Oakland Road, a portion of U.S. Highway 190

Power Outages

Substation Locations and Areas Served by Those Substations

Livonia
U. S. Highway 190--East of Livonia and including Bigman Lane, Richfield, LA Highway 979, Maringouin, Ramah, LA Highway 75--south of Livonia, Bellmont Lane, Valverda, Wheelock Lane, West Oak Lane, LA Highway 76--to Rosedale, Dixie Pipeline

Grosse Tete Meter Point-North End
Grosse Tete, LA Highway 77, LA Highway 75, LA Highway 386, Bayou Blue, Upper Grand River, McBay Subdivision

Plaquemine Meter Point-South End
Grosse Tete, LA Highway 77, Little Farm Subdivision, the Pelican Shipyard area

Bayou Sorrel
LA Highway 75--Sorrel, Sorrel Locks, Across the Sorrel Bridge, Along the levee

Bayou Pigeon
LA Highway 75--At LA Highway 404 south to Bayou Pigeon, Across the Pigeon Bridge

Industrial Sites
- Formosa-Nanya/JM Eagle
- Pointe Coupee Parish Port
- Diamond Plastics/Iberville Industrial Park

Power Outages

Mobile Substation

When it comes to providing reliable electric service to more than 10,000 meters across three parishes, substations are critical components in the process. When a substation transformer fails, power could be lost to literally thousands of homes and businesses.

In the past, PC Electric has been able to borrow mobile substations from fellow cooperatives throughout the state, but often had to wait many months before those assisting cooperatives could release their equipment.

For these reasons, officials at PC Electric made the prudent decision to purchase a mobile substation of its own. In December 2013, the cooperative secured its first mobile substation which could be used in the event of both planned and emergency outages. The purchase of this substation is just another example of how the cooperative is looking out for its members and doing everything we can to provide safe and reliable electric service.

Power Outages

What's on an Electric Power Pole?

This is an illustration of basic equipment found on a typical distribution pole and can vary by location.

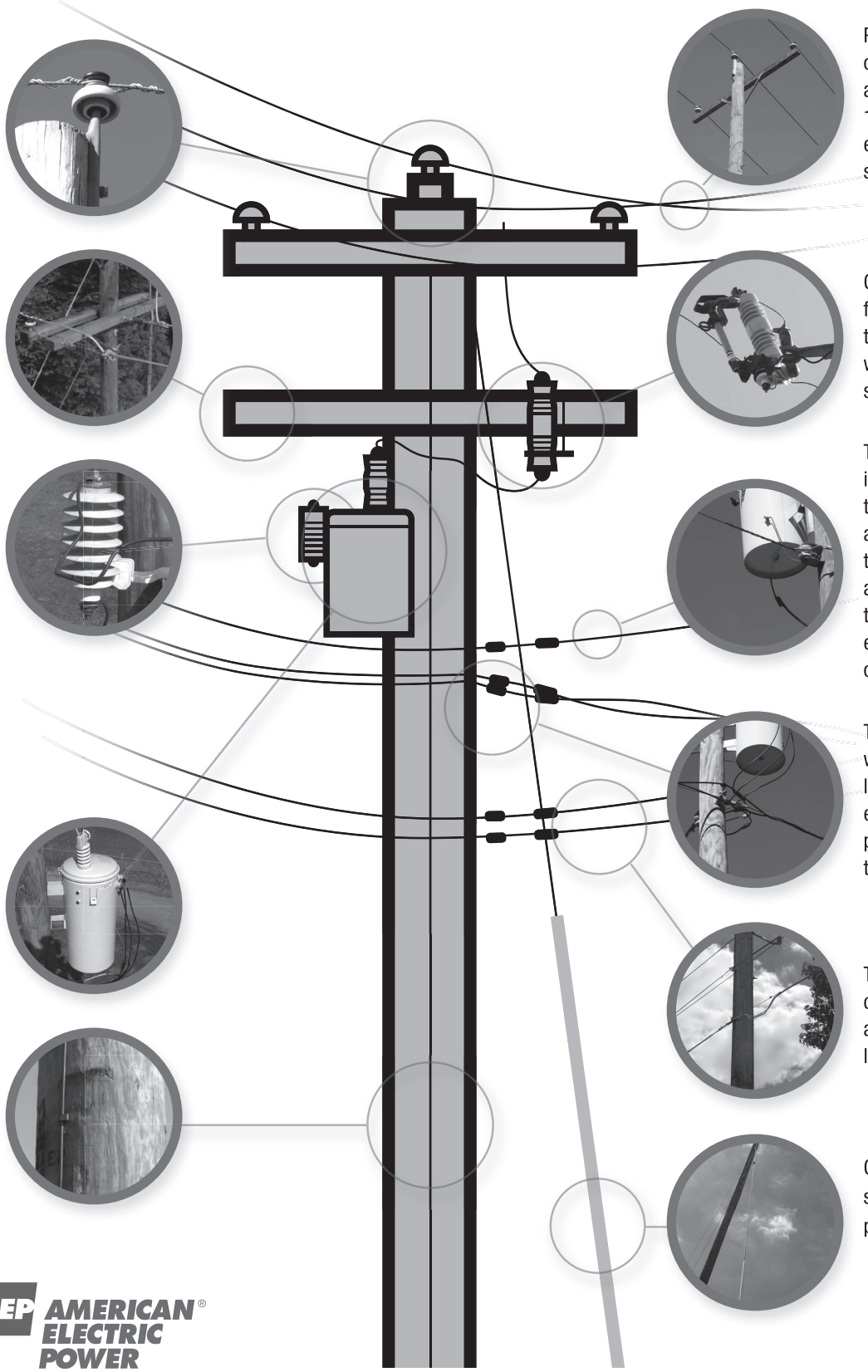

Insulators prevent energized wires from coming in contact with each other or the utility pole.

A crossarm holds the wires up on the pole.

Lightning arrestors protect the pole and equipment from lightning strikes.

Transformers convert higher voltage electricity carried by primary wires and lowers the voltage for use by customers.

A ground wire runs the entire length of the pole. It directs any electricity on the pole safely into the earth.

Primary wires are on top of the pole and usually carry 12,000 volts of electricity from a substation.

Cutouts act like a fuse and open when there is a problem with the line or a section of it.

The neutral wire is below the transformer and acts as a line back to the substation and balances out the amount of electricity or load on the system.

The secondary wire carries the lower voltage electricity after it passes through the transformer.

Telephone and cable wires are typically the lowest wires.

Guy wires help stabilize utility poles.

AEP AMERICAN® ELECTRIC POWER

Power Outages

Generator Usage

The improper use of a generator during a power outage can cause a hazardous situation for you, your neighbors and the people who are restoring your power. Hazardous situations can be defined as not only causing a fire or damaging appliances, but also back feeding electricity onto the power lines that are assumed to be de-energized.

Connecting a generator to the main electrical supply for your house requires the services of a qualified, licensed electrician. For more information on how to properly connect a generator, please visit our website at www.pcemc.org or contact PC Electric at 1-800-738-7232.

Alternate Power Supply

Alternate power supply can be defined as fueled by renewable resources such as solar, wind, hydroelectric, geothermal, biomass, fuel, micro turbines, etc. The improper use of an alternate power supply during a power outage can cause a hazardous situation for you, your neighbors and the people who are restoring your power. This hazardous situation can be defined as back feeding electricity onto the power lines that are assumed to be de-energized.

Operating an alternate power supply requires providing PC Electric with lockable switching equipment thats purpose is to isolate the cooperative's system from the alternate power supply. You are required to contact your electric cooperative before installing an alternate power supply. Please contact PC Electric at 1-800-738-7232.

Power Outages

Life Support Systems

PC Electric is always updating its records for life support equipment needs and would appreciate your cooperation in providing this vital information.

As our members know, there is nothing that can be done to prevent outages due to extreme weather or other acts of nature. The cooperative strives to minimize any inconvenience for its members by planning outages for maintenance and restoring service during outages as quickly as possible.

It is sometimes necessary to plan brief outages in order to maintain quality service and perform important maintenance or construction to our electric distribution systems. These brief outages ensure the safety of the cooperative's linemen. **For those individuals with medical devices, we strongly recommend backup generators or working with local medical providers for an emergency plan for storms or extended power outages.**

We are making a special effort to assist any member who relies on a life support system or equipment. We also need to be advised of any changes that are made and if the system or equipment is removed. We appreciate your cooperation in this important matter.

If someone in your home is dependent on life support equipment, please fill out the form below and mail it to:

PC Electric
P.O. Box 160
New Roads, LA 70760

Name: _____

Address:

_____

_____

Telephone: _____

Account Number: _____

Type of Support System:_____

Do you have an emergency standby generator to opearate this equipment?

Please Check One) Yes_____ No _____

Seven Cooperative Principles

1. Voluntary and Open Membership

Cooperatives are voluntary organizations, open to all people able to use its services and willing to accept the responsibilities of membership, without gender, social, racial, political or religious discrimination.

2. Democratic Member Control

Cooperatives are democratic organizations controlled by their members—those who buy the goods or use the services of the cooperative—who actively participate in setting policies and making decisions.

3. Members' Economic Participation

Members contribute equally to, and democratically control, the capital of the cooperative. This benefits members in proportion to the business they conduct with the cooperative rather than on the capital invested.

4. Autonomy and Independence

Cooperatives are autonomous, self-help organizations controlled by their members. If the co-op enters into agreements with other organizations or raises capital from external sources, it is done so based on terms that ensure democratic control by the members and maintains the cooperative's autonomy.

5. Education, Training and Information

Cooperatives provide education and training for members, elected representatives, managers and employees so they can contribute effectively to the development of their cooperative. Members also inform the general public about the nature and benefits of cooperatives.

6. Cooperation among Cooperatives

Cooperatives serve their members most effectively and strengthen the cooperative movement by working together through local, national, regional and international structures.

7. Concern for Community

While focusing on member needs, cooperatives work for the sustainable development of communities through policies and programs accepted by the members.

PC Electric

www.pcemc.org

Follow Us:

2506 False River Drive ~ P.O. Box 160
New Roads, LA 70760
(225) 638-3751 Phone
(225) 638-8124 Fax
(800) 738-7232 Toll Free

12th Printing • 1/2019